To our customers,

Old Company Name in Catalogs and Other Documents

On April 1st, 2010, NEC Electronics Corporation merged with Renesas Technology Corporation, and Renesas Electronics Corporation took over all the business of both companies. Therefore, although the old company name remains in this document, it is a valid Renesas Electronics document. We appreciate your understanding.

Renesas Electronics website: http://www.renesas.com

April 1st, 2010
Renesas Electronics Corporation

Issued by: Renesas Electronics Corporation (http://www.renesas.com)

Send any inquiries to http://www.renesas.com/inquiry.

RENESAS

Notice

1. All information included in this document is current as of the date this document is issued. Such information, however, is subject to change without any prior notice. Before purchasing or using any Renesas Electronics products listed herein, please confirm the latest product information with a Renesas Electronics sales office. Also, please pay regular and careful attention to additional and different information to be disclosed by Renesas Electronics such as that disclosed through our website.
2. Renesas Electronics does not assume any liability for infringement of patents, copyrights, or other intellectual property rights of third parties by or arising from the use of Renesas Electronics products or technical information described in this document. No license, express, implied or otherwise, is granted hereby under any patents, copyrights or other intellectual property rights of Renesas Electronics or others.
3. You should not alter, modify, copy, or otherwise misappropriate any Renesas Electronics product, whether in whole or in part.
4. Descriptions of circuits, software and other related information in this document are provided only to illustrate the operation of semiconductor products and application examples. You are fully responsible for the incorporation of these circuits, software, and information in the design of your equipment. Renesas Electronics assumes no responsibility for any losses incurred by you or third parties arising from the use of these circuits, software, or information.
5. When exporting the products or technology described in this document, you should comply with the applicable export control laws and regulations and follow the procedures required by such laws and regulations. You should not use Renesas Electronics products or the technology described in this document for any purpose relating to military applications or use by the military, including but not limited to the development of weapons of mass destruction. Renesas Electronics products and technology may not be used for or incorporated into any products or systems whose manufacture, use, or sale is prohibited under any applicable domestic or foreign laws or regulations.
6. Renesas Electronics has used reasonable care in preparing the information included in this document, but Renesas Electronics does not warrant that such information is error free. Renesas Electronics assumes no liability whatsoever for any damages incurred by you resulting from errors in or omissions from the information included herein.
7. Renesas Electronics products are classified according to the following three quality grades: "Standard", "High Quality", and "Specific". The recommended applications for each Renesas Electronics product depends on the product's quality grade, as indicated below. You must check the quality grade of each Renesas Electronics product before using it in a particular application. You may not use any Renesas Electronics product for any application categorized as "Specific" without the prior written consent of Renesas Electronics. Further, you may not use any Renesas Electronics product for any application for which it is not intended without the prior written consent of Renesas Electronics. Renesas Electronics shall not be in any way liable for any damages or losses incurred by you or third parties arising from the use of any Renesas Electronics product for an application categorized as "Specific" or for which the product is not intended where you have failed to obtain the prior written consent of Renesas Electronics. The quality grade of each Renesas Electronics product is "Standard" unless otherwise expressly specified in a Renesas Electronics data sheets or data books, etc.

   "Standard": Computers; office equipment; communications equipment; test and measurement equipment; audio and visual equipment; home electronic appliances; machine tools; personal electronic equipment; and industrial robots.

   "High Quality": Transportation equipment (automobiles, trains, ships, etc.); traffic control systems; anti-disaster systems; anti-crime systems; safety equipment; and medical equipment not specifically designed for life support.

   "Specific": Aircraft; aerospace equipment; submersible repeaters; nuclear reactor control systems; medical equipment or systems for life support (e.g. artificial life support devices or systems), surgical implantations, or healthcare intervention (e.g. excision, etc.), and any other applications or purposes that pose a direct threat to human life.
8. You should use the Renesas Electronics products described in this document within the range specified by Renesas Electronics, especially with respect to the maximum rating, operating supply voltage range, movement power voltage range, heat radiation characteristics, installation and other product characteristics. Renesas Electronics shall have no liability for malfunctions or damages arising out of the use of Renesas Electronics products beyond such specified ranges.
9. Although Renesas Electronics endeavors to improve the quality and reliability of its products, semiconductor products have specific characteristics such as the occurrence of failure at a certain rate and malfunctions under certain use conditions. Further, Renesas Electronics products are not subject to radiation resistance design. Please be sure to implement safety measures to guard them against the possibility of physical injury, and injury or damage caused by fire in the event of the failure of a Renesas Electronics product, such as safety design for hardware and software including but not limited to redundancy, fire control and malfunction prevention, appropriate treatment for aging degradation or any other appropriate measures. Because the evaluation of microcomputer software alone is very difficult, please evaluate the safety of the final products or system manufactured by you.
10. Please contact a Renesas Electronics sales office for details as to environmental matters such as the environmental compatibility of each Renesas Electronics product. Please use Renesas Electronics products in compliance with all applicable laws and regulations that regulate the inclusion or use of controlled substances, including without limitation, the EU RoHS Directive. Renesas Electronics assumes no liability for damages or losses occurring as a result of your noncompliance with applicable laws and regulations.
11. This document may not be reproduced or duplicated, in any form, in whole or in part, without prior written consent of Renesas Electronics.
12. Please contact a Renesas Electronics sales office if you have any questions regarding the information contained in this document or Renesas Electronics products, or if you have any other inquiries.

(Note 1) "Renesas Electronics" as used in this document means Renesas Electronics Corporation and also includes its majority-owned subsidiaries.

(Note 2) "Renesas Electronics product(s)" means any product developed or manufactured by or for Renesas Electronics.

RENESAS

Phase-out/Discontinued

MOS INTEGRATED CIRCUIT

μPD780031, 780032, 780033, 780034

8-BIT SINGLE-CHIP MICROCONTROLLERS

DESCRIPTION

The μPD780031, 780032, 780033, and 780034 are members of the μPD780034 Subseries of the 78K/0 Series. They provide only selected functions of the existing μPD78054 Subseries, and feature an enhanced serial interface as well as an on-chip 10-bit resolution A/D converter.

A flash memory version, the μPD78F0034, ROM version and various development tools are available.

Detailed function descriptions are provided in the following user's manuals. Be sure to read them before designing.

μPD780024, 780034, 780024Y, 780034Y Subseries User's Manual: U12022E
78K/0 Series User's Manual – Instructions : U12326E

FEATURES

- Internal ROM and RAM

Item / Part Number	Program Memory (Internal ROM)	Data Memory (Internal High-Speed RAM)	Package
μPD780031	8 Kbytes	512 bytes	• 64-pin plastic shrink DIP (750 mil) • 64-pin plastic QFP (14 × 14 mm) • 64-pin plastic LQFP (12 × 12 mm)
μPD780032	16 Kbytes		
μPD780033	24 Kbytes	1024 bytes	
μPD780034	32 Kbytes		

- External memory expansion space: 64 Kbytes
- Minimum instruction execution time: 0.24 μs (at f_X = 8.38-MHz operation)
- I/O ports: 51 (N-ch open-drain 5-V withstand voltage: 4)
- ★ 10-bit resolution A/D converter: 8 channels (AV_{DD} = 2.7 to 5.5 V)
- Serial interface: 3 channels
- Timer: 5 channels
- Power supply voltage: V_{DD} = 1.8 to 5.5 V

APPLICATIONS

Telephones, home electric appliances, pagers, AV equipment, car audios, office automation equipment, etc.

The information in this document is subject to change without notice.

Document No. U12300EJ1V0DS00 (1st edition)
Date Published November 1997 N
Printed in Japan

The mark ★ shows major revised points.

ORDERING INFORMATION

Part Number	Package
μPD780031CW-xxx	64-pin plastic shrink DIP (750 mils)
μPD780031GC-xxx-AB8	64-pin plastic QFP (14 × 14 mm)
μPD780031GK-xxx-8A8	64-pin plastic LQFP (12 × 12 mm)
μPD780032CW-xxx	64-pin plastic shrink DIP (750 mils)
μPD780032GC-xxx-AB8	64-pin plastic QFP (14 × 14 mm)
μPD780032GK-xxx-8A8	64-pin plastic LQFP (12 × 12 mm)
μPD780033CW-xxx	64-pin plastic shrink DIP (750 mils)
μPD780033GC-xxx-AB8	64-pin plastic QFP (14 × 14 mm)
μPD780033GK-xxx-8A8	64-pin plastic LQFP (12 × 12 mm)
μPD780034CW-xxx	64-pin plastic shrink DIP (750 mils)
μPD780034GC-xxx-AB8	64-pin plastic QFP (14 × 14 mm)
μPD780034GK-xxx-8A8	64-pin plastic LQFP (12 × 12 mm)

Remark xxx indicates the ROM code suffix.

★ 78K/0 SERIES PRODUCT DEVELOPMENT

These products are a further development in the 78K/0 Series. The designations appearing inside the boxes are subseries names.

Products in mass production

Products under development

Y subseries products are compatible with I²C bus.

78K/0 Series

Control

100-pin	μPD78075B		EMI noise reduced version of the μPD78078
100-pin	μPD78078	μPD78078Y	A timer was added to the μPD78054, and external interface function was enhanced
100-pin	μPD78070A	μPD78070AY	ROM-less versions of the μPD78078
100-pin		μPD780018AY	Serial I/O of the μPD78078Y was enhanced, and only selected functions are provided
80-pin	μPD780058	μPD780058Y Note	Serial I/O of the μPD78054 was enhanced, EMI noise reduced version
80-pin	μPD78058F	μPD78058FY	EMI noise reduced version of the μPD78054
80-pin	μPD78054	μPD78054Y	UART and D/A converter were added to the μPD78014, and I/O was enhanced
64-pin	μPD780034	μPD780034Y	An A/D converter of the μPD780024 was enhanced
64-pin	μPD780024	μPD780024Y	Serial I/O of the μPD78018F was enhanced
64-pin	μPD78014H		EMI noise reduced version of the μPD78018F
64-pin	μPD78018F	μPD78018FY	Low-voltage (1.8 V) operation versions of the μPD78014 with several ROM and RAM capacities available
64-pin	μPD78014	μPD78014Y	An A/D converter and 16-bit timer were added to the μPD78002
64-pin	μPD780001		An A/D converter was added to the μPD78002
64-pin	μPD78002	μPD78002Y	Basic subseries for control
42/44-pin	μPD78083		On-chip UART, capable of operating at a low voltage (1.8 V)

Inverter control

64-pin	μPD780988	Inverter control, timer and SIO of the μPD780964 were enhanced, and ROM and RAM capacities were expanded.
64-pin	μPD780964	An A/D converter of the μPD780924 was enhanced
64-pin	μPD780924	On-chip inverter control circuit and UART, EMI noise reduced version

FIP™ drive

100-pin	μPD780208	The I/O and FIP C/D of the μPD78044F were enhanced, Display output total: 53
100-pin	μPD780228	The I/O and FIP C/D of the μPD78044H were enhanced, Display output total: 48
80-pin	μPD78044H	N-ch open-drain input/output was added to the μPD78044F, Display output total: 34
80-pin	μPD78044F	Basic subseries for driving FIP, Display output total: 34

LCD drive

100-pin	μPD780308	μPD780308Y	SIO of the μPD78064 was enhanced, and ROM and RAM capacities were expanded
100-pin	μPD78064B		EMI noise reduced version of the μPD78064
100-pin	μPD78064	μPD78064Y	Basic subseries for driving LCDs, On-chip UART

IEBus™ supported

80-pin	μPD78098B	EMI noise reduced version of the μPD78098
80-pin	μPD78098	An IEBus controller was added to the μPD78054

Meter control

80-pin	μPD780973	On-chip automobile meter drive controller/driver

Note Under planning

The major functional differences among the subseries are shown below.

Subseries Name \ Function		ROM Capacity	Timer 8-bit	Timer 16-bit	Timer Watch	Timer WDT	8-bit A/D	10-bit A/D	8-bit D/A	Serial Interface	I/O	V_{DD} MIN. Value	External Expansion
Control	μPD78075B	32 K-40 K	4 ch	1 ch	1 ch	1 ch	8 ch	–	2 ch	3 ch (UART: 1 ch)	88	1.8 V	Available
	μPD78078	48 K-60 K											
	μPD78070A	–									61	2.7 V	
	μPD780058	24 K-60 K	2 ch							3 ch (time-division UART: 1ch)	68	1.8 V	
	μPD78058F	48 K-60 K								3 ch (UART: 1 ch)	69	2.7 V	
	μPD78054	16 K-60 K										2.0 V	
	μPD780034	8 K-32 K					–	8 ch	–	3 ch (UART: 1 ch, time-division 3-wire: 1 ch)	51	1.8 V	
	μPD780024						8 ch	–					
	μPD78014H									2 ch	53		
	μPD78018F	8 K-60 K											
	μPD78014	8 K-32 K										2.7 V	
	μPD780001	8 K		–	–					1 ch	39		–
	μPD78002	8 K-16 K			1 ch		–				53		Available
	μPD78083				–		8 ch			1 ch (UART: 1 ch)	33	1.8 V	–
Inverter control	μPD780988	32 K-60 K	3 ch	**Note 1**	–	1 ch	–	8 ch	–	3 ch (UART: 2 ch)	47	4.0 V	Available
	μPD780964	8 K-32 K		**Note 2**						2 ch (UART: 2 ch)		2.7 V	
	μPD780924						8 ch	–					
FIP drive	μPD780208	32 K-60 K	2 ch	1 ch	1 ch	1 ch	8 ch	–	–	2 ch	74	2.7 V	–
	μPD780228	48 K-60 K	3 ch	–	–					1 ch	72	4.5 V	
	μPD78044H	32 K-48 K	2 ch	1 ch	1 ch						68	2.7 V	
	μPD78044F	16 K-40 K								2 ch			
LCD drive	μPD780308	48 K-60 K	2 ch	1 ch	1 ch	1 ch	8 ch	–	–	3 ch (time-division UART: 1 ch)	57	2.0 V	–
	μPD78064B	32 K								2 ch (UART: 1 ch)			
	μPD78064	16 K-32 K											
IEBus supported	μPD78098B	40 K-60 K	2 ch	1 ch	1 ch	1 ch	8 ch	–	2 ch	3 ch (UART: 1 ch)	69	2.7 V	Available
	μPD78098	32 K-60 K											
Meter control	μPD780973	24 K-32 K	3 ch	1 ch	1 ch	1 ch	5 ch	–	–	2 ch (UART: 1 ch)	56	4.5 V	–

Notes 1. 16-bit timer: 2 channels
10-bit timer: 1 channel
2. 10-bit timer: 1 channel

FUNCTION OVERVIEW

Item \ Part Number		μPD780031	μPD780032	μPD780033	μPD780034
Internal memory	ROM	8 Kbytes	16 Kbytes	24 Kbytes	32 Kbytes
	High-speed RAM	512 bytes		1024 bytes	
Memory space		64 Kbytes			
General-purpose registers		8 bits × 32 registers (8 bits × 8 registers × 4 banks)			
Minimum instruction execution time		On-chip minimum instruction execution time cycle change function			
	When main system clock selected	0.24 μs/0.48 μs/0.95 μs/1.91 μs/3.81 μs (at 8.38-MHz operation)			
	When subsystem clock selected	122 μs (at 32.768-kHz operation)			
Instruction set		• 16-bit operation • Multiply/divide (8 bits × 8 bits,16 bits ÷ 8 bits) • Bit manipulate (set, reset, test, Boolean operation) • BCD adjust, etc.			
I/O ports		Total : 51 • CMOS input : 8 • CMOS I/O : 39 • N-ch open-drain I/O (5-V withstand voltage) : 4			
A/D converter		• 10-bit resolution x 8 channels • Low-voltage operation available: AV_{DD} = 2.7 to 5.5 V			
Serial interface		• 3-wire serial I/O mode : 2 channels • UART mode : 1 channel			
Timer		• 16-bit timer/event counter : 1 channel • 8-bit timer/event counter : 2 channels • Watch timer : 1 channel • Watchdog timer : 1 channel			
Timer output		3 (8-bit PWM output capable: 2)			
Clock output		• 65.5 kHz, 131 kHz, 262 kHz, 524 kHz, 1.05 MHz, 2.10 MHz, 4.19 MHz, 8.38 MHz (main system clock: at 8.38-MHz operation) • 32.768 kHz (subsystem clock: at 32.768-kHz operation)			
Buzzer output		1.02 kHz, 2.05 kHz, 4.10 kHz, 8.19 kHz (main system clock: at 8.38-MHz operation)			
Vectored interrupt sources	Maskable	Internal : 13, external : 5			
	Non-maskable	Internal : 1			
	Software	1			
Power supply voltage		V_{DD} = 1.8 to 5.5 V			
Operating ambient temperature		T_A = –40 to +85°C			
Package		• 64-pin plastic shrink DIP (750 mils) • 64-pin plastic QFP (14 × 14 mm) • 64-pin plastic LQFP (12 × 12 mm)			

★

CONTENTS

1. PIN CONFIGURATION (Top View) 7

2. BLOCK DIAGRAM 10

3. PIN FUNCTIONS 11
   3.1 Port Pins 11
   3.2 Non-port Pins 12
   3.3 Pin I/O Circuits and Recommended Connection of Unused Pins 14

4. MEMORY SPACE 16

5. PERIPHERAL HARDWARE FUNCTION FEATURES 17
   5.1 Ports 17
   5.2 Clock Generator 18
   5.3 Timer/Counter 19
   5.4 Clock Output/Buzzer Output Control Circuit 23
   5.5 A/D Converter 24
   5.6 Serial Interface 25

6. INTERRUPT FUNCTIONS 27

7. EXTERNAL DEVICE EXPANSION FUNCTIONS 30

8. STANDBY FUNCTIONS 30

9. RESET FUNCTION 30

10. INSTRUCTION SET 31

★ 11. ELECTRICAL SPECIFICATIONS 33

12. PACKAGE DRAWINGS 52

APPENDIX A. DEVELOPMENT TOOLS 55

APPENDIX B. RELATED DOCUMENTS 58

1. PIN CONFIGURATION (Top View)

- **64-pin plastic shrink DIP (750 mils)**
  μPD780031CW-xxx, 780032CW-xxx, 780033CW-xxx, 780034CW-xxx

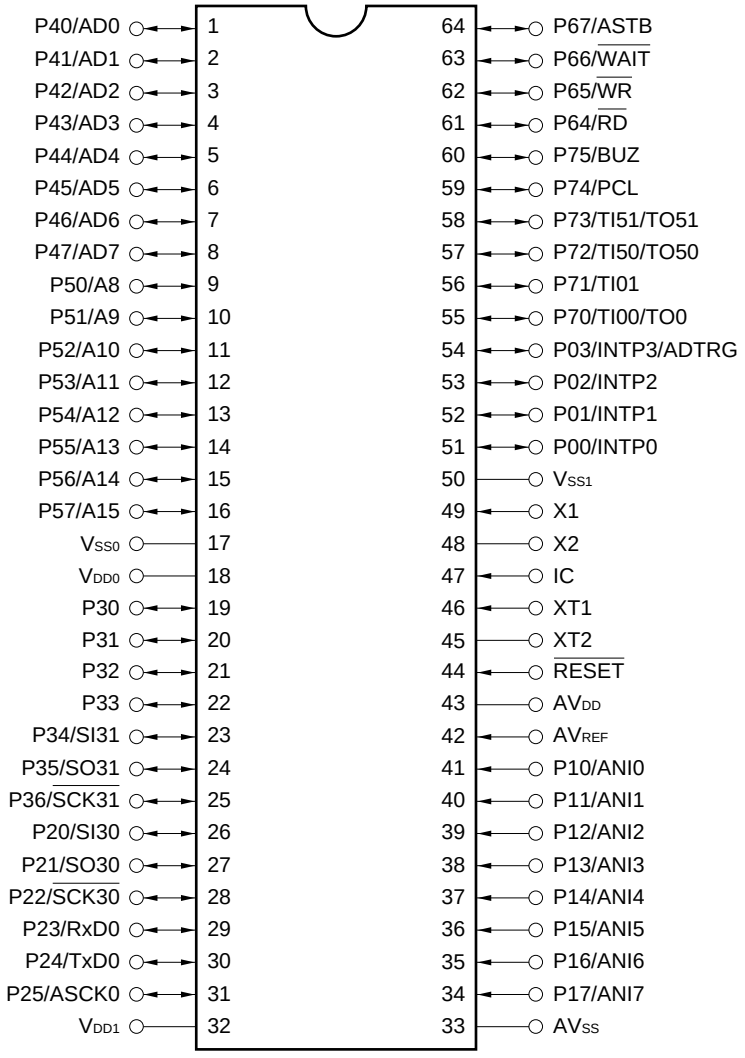

★ **Cautions 1. Connect the IC (Internally Connected) pin directly to V_{SS0} or V_{SS1}.**
2. Connect the AV_{SS} pin to V_{SS0}.

Remark When the μPD780031, 780032, 780033, and 780034 are used in applications where the noise generated inside the microcontroller needs to be reduced, the implementation of noise reduction measures, such as supplying voltage to V_{DD0} and V_{DD1} individually and connecting V_{SS0} and V_{SS1} to different ground lines, is recommended.

- **64-pin plastic QFP (14 × 14 mm)**
  μPD780031GC-xxx-AB8, 780032GC-xxx-AB8, 780033GC-xxx-AB8, 780034GC-xxx-AB8
- **64-pin plastic LQFP (12 × 12 mm)**
  μPD780031GK-xxx-8A8, 780032GK-xxx-8A8, 780033GK-xxx-8A8, 780034GK-xxx-8A8

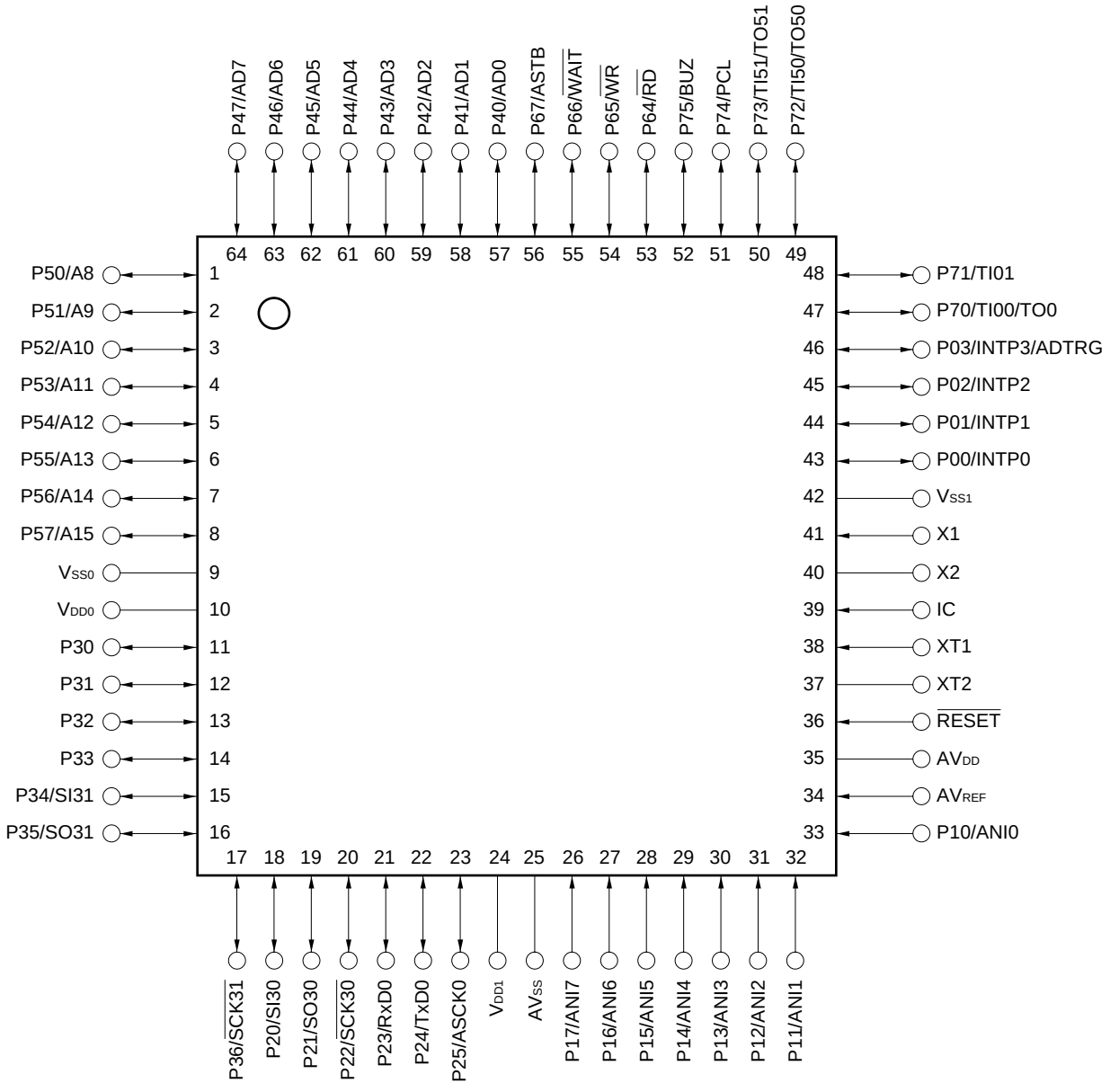

★ **Cautions 1. Connect the IC (Internally Connected) pin directly to V_{SS0} or V_{SS1}.**
2. Connect the AV_{SS} pin to V_{SS0}.

Remark When the μPD780031, 780032, 780033, and 780034 are used in applications where the noise generated inside the microcontroller needs to be reduced, the implementation of noise reduction measures, such as supplying voltage to V_{DD0} and V_{DD1} individually and connecting V_{SS0} and V_{SS1} to different ground lines, is recommended.

A8 to A15	: Address Bus	P64 to P67	: Port 6
AD0 to AD7	: Address/Data Bus	P70 to P75	: Port 7
ADTRG	: AD Trigger Input	PCL	: Programmable Clock
ANI0 to ANI7	: Analog Input	$\overline{RD}$	: Read Strobe
ASCK0	: Asynchronous Serial Clock	$\overline{RESET}$	: Reset
ASTB	: Address Strobe	RxD0	: Receive Data
AV_{DD}	: Analog Power Supply	$\overline{SCK30}$, $\overline{SCK31}$	: Serial Clock
AV_{REF}	: Analog Reference Voltage	SI30, SI31	: Serial Input
AV_{SS}	: Analog Ground	SO30, SO31	: Serial Output
BUZ	: Buzzer Clock	TI00, TI01, TI50, TI51	: Timer Input
IC	: Internally Connected	TO0, TO50, TO51	: Timer Output
INTP0 to INTP3	: Interrupt from Peripherals	TxD0	: Transmit Data
P00 to P03	: Port 0	V_{DD0}, V_{DD1}	: Power Supply
P10 to P17	: Port 1	V_{SS0}, V_{SS1}	: Ground
P20 to P25	: Port 2	$\overline{WAIT}$	: Wait
P30 to P36	: Port 3	$\overline{WR}$	: Write Strobe
P40 to P47	: Port 4	X1, X2	: Crystal (Main System Clock)
P50 to P57	: Port 5	XT1, XT2	: Crystal (Subsystem Clock)

2. BLOCK DIAGRAM

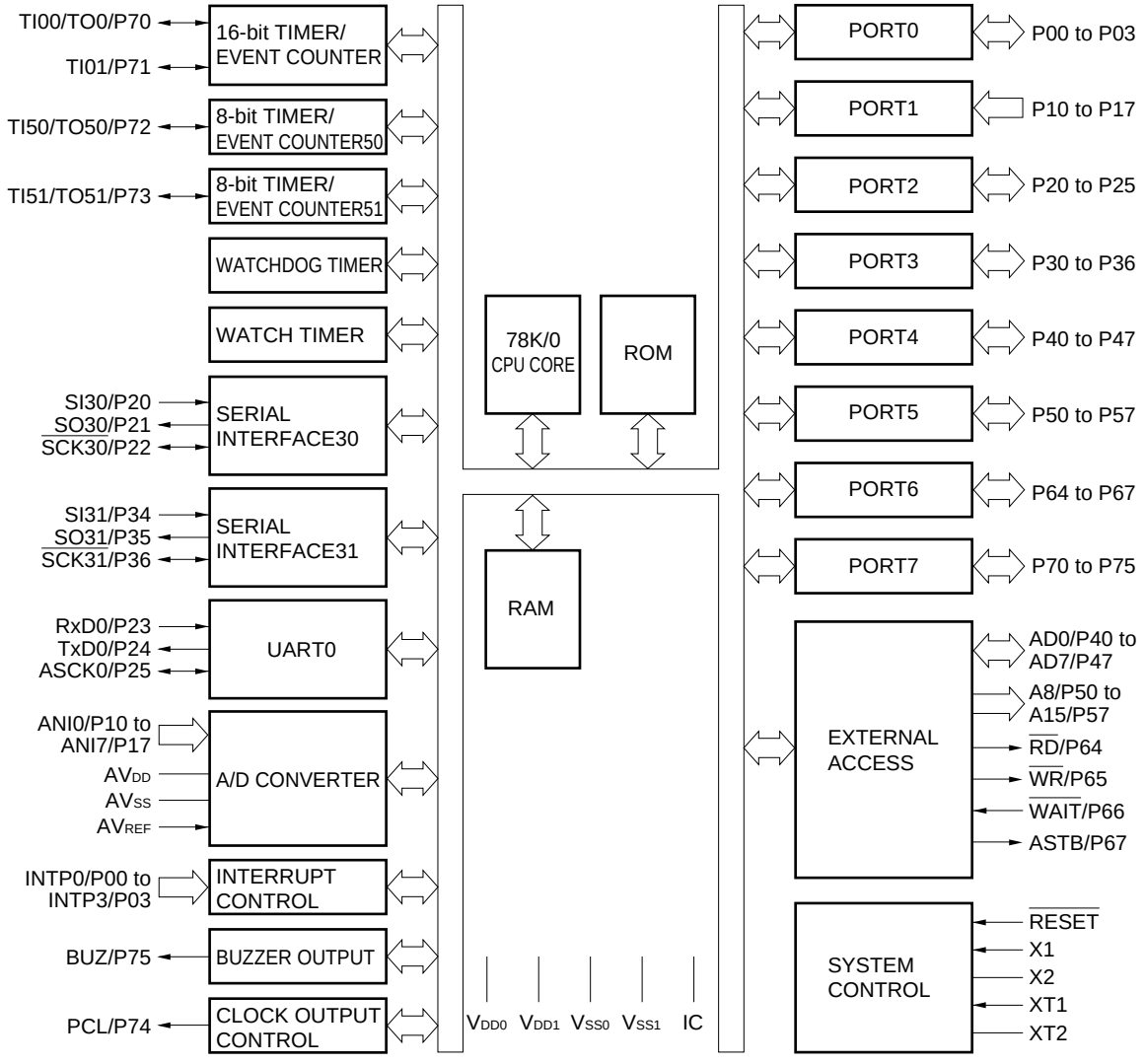

Remark The internal ROM and RAM capacities depend on the product.

3. PIN FUNCTIONS

3.1 Port Pins (1/2)

Pin Name	I/O	Function	After Reset	Alternate Function
P00	I/O	Port 0 4-bit input/output port. Input/output can be specified bit-wise. When used as an input port, an on-chip pull-up resistor can be connected by software.	Input	INTP0
P01				INTP1
P02				INTP2
P03				INTP3/ADTRG
P10 to P17	Input	Port 1 8-bit input only port.	Input	ANI0 to ANI7
P20	I/O	Port 2 6-bit input/output port. Input/output can be specified bit-wise. When used as an input port, an on-chip pull-up resistor can be connected by software.	Input	SI30
P21				SO30
P22				$\overline{\text{SCK30}}$
P23				RxD0
P24				TxD0
P25				ASCK0
P30	I/O	Port 3 7-bit input/output port. Input/output can be specified bit-wise. N-ch open-drain input/output port. An on-chip pull-up resistor can be specified by mask option. LEDs can be driven directly.	Input	—
P31				
P32				
P33				
P34		When used as an input port, an on-chip pull-up resistor can be connected by software.		SI31
P35				SO31
P36				$\overline{\text{SCK31}}$
P40 to P47	I/O	Port 4 8-bit input/output port. Input/output can be specified bit-wise. When used as an input port, an on-chip pull-up resistor can be connected by software. Interrupt request flag (KRIF) is set to 1 by the falling edge detection.	Input	AD0 to AD7
P50 to P57	I/O	Port 5 8-bit input/output port. LEDs can be driven directly. Input/output can be specified bit-wise. When used as an input port, an on-chip pull-up resistor can be connected by software.	Input	A8 to A15
P64	I/O	Port 6 4-bit input/output port. Input/output can be specified bit-wise. When used as an input port, an on-chip pull-up resistor can be connected by software.	Input	$\overline{\text{RD}}$
P65				$\overline{\text{WR}}$
P66				$\overline{\text{WAIT}}$
P67				ASTB

3.1 Port Pins (2/2)

Pin Name	I/O	Function	After Reset	Alternate Function
P70	I/O	Port 7 6-bit input/output port. Input/output can be specified bit-wise. When used as an input port, an on-chip pull-up resistor can be connected by software.	Input	TI00/TO0
P71				TI01
P72				TI50/TO50
P73				TI51/TO51
P74				PCL
P75				BUZ

3.2 Non-port Pins (1/2)

Pin Name	I/O	Function	After Reset	Alternate Function
INTP0	Input	External interrupt request input for which the effective edge (rising edge, falling edge, or both rising edge and falling edge) can be specified.	Input	P00
INTP1				P01
INTP2				P02
INTP3				P03/ADTRG
SI30	Input	Serial interface serial data input.	Input	P20
SI31				P34
SO30	Output	Serial interface serial data output.	Input	P21
SO31				P35
$\overline{\text{SCK30}}$	I/O	Serial interface serial clock input/output.	Input	P22
$\overline{\text{SCK31}}$				P36
RxD0	Input	Serial data input for asynchronous serial interface.	Input	P23
TxD0	Output	Serial data output for asynchronous serial interface.	Input	P24
ASCK0	Input	Serial clock input for asynchronous serial interface.	Input	P25
TI00	Input	External count clock input to 16-bit timer (TM0). Capture trigger input to capture register (CR01) of 16-bit timer (TM0).	Input	P70/TO0
TI01		Capture trigger input to capture register (CR00) of 16-bit timer (TM0).		P71
TI50		External count clock input to 8-bit timer (TM50).		P72/TO50
TI51		External count clock input to 8-bit timer (TM51).		P73/TO51
TO0	Output	16-bit timer (TM0) output.	Input	P70/TI00
TO50		8-bit timer (TM50) output (shared with 8-bit PWM output).	Input	P72/TI50
TO51		8-bit timer (TM51) output (shared with 8-bit PWM output).		P73/TI51
PCL	Output	Clock output (for trimming of main system clock and subsystem clock).	Input	P74
BUZ	Output	Buzzer output.	Input	P75
AD0 to AD7	I/O	Lower address/data bus for extending memory externally.	Input	P40 to P47
A8 to A15	Output	Higher address bus for extending memory externally.	Input	P50 to P57
$\overline{\text{RD}}$	Output	Strobe signal output for read operation of external memory.	Input	P64
$\overline{\text{WR}}$		Strobe signal output for write operation of external memory.		P65
$\overline{\text{WAIT}}$	Input	Inserting wait for accessing external memory.	Input	P66
ASTB	Output	Strobe output which externally latches address information output to port 4 and port 5 to access external memory.	Input	P67

3.2 Non-port Pins (2/2)

Pin Name	I/O	Function	After Reset	Alternate Function
ANI0 to ANI7	Input	A/D converter analog input.	Input	P10 to P17
ADTRG	Input	A/D converter trigger signal input.	Input	P03/INTP3
AV_{REF}	Input	A/D converter reference voltage input.	—	—
AV_{DD}	—	A/D converter analog power supply. Set potential to that of V_{DD0} or V_{DD1}.	—	—
AV_{SS}	—	A/D converter ground potential. Set potential to that of V_{SS0} or V_{SS1}.	—	—
$\overline{RESET}$	Input	System reset input.	—	—
X1	Input	Connecting crystal resonator for main system clock oscillation.	—	—
X2	—		—	—
XT1	Input	Connecting crystal resonator for subsystem clock oscillation.	—	—
XT2	—		—	—
V_{DD0}	—	Positive power supply for ports.	—	—
V_{SS0}	—	Ground potential of ports.	—	—
V_{DD1}	—	Positive power supply (except ports).	—	—
V_{SS1}	—	Ground potential (except ports).	—	—
★ IC	—	Internally connected. Connect directly to V_{SS0} or V_{SS1}.	—	—

3.3 Pin I/O Circuits and Recommended Connection of Unused Pins

The input/output circuit type of each pin and recommended connection of unused pins are shown in Table 3-1. For the input/output circuit configuration of each type, see Figure 3-1.

Table 3-1. Input/Output Circuit Type of Each Pin

Pin Name	Input/output Circuit Type	I/O	Recommended Connection when not Used
P00/INTP0	8-C	Input	Independently connect to V_{SS0} via a resistor .
P01/INTP1			
P02/INTP2			
P03/INTP3			
P10/ANI0 to P17/ANI7	25	Input	Independently connect to V_{DD0} or V_{SS0} via a resistor.
P20/SI30	8-C	Input/output	
P21/SO30	5-H		
P22/$\overline{\text{SCK30}}$	8-C		
P23/RxD0			
P24/TxD0	5-H		
P25/ASCK0	8-C		
P30, P31	13-Q	Input/output	Independently connect to V_{DD0} via a resistor .
P32, P33	13-S		
P34/SI31	8-C		Independently connect to V_{DD0} or V_{SS0} via a resistor .
P35/SO31	5-H		
P36/$\overline{\text{SCK31}}$	8-C		
P40/AD0 to P47/AD7	5-H	Input/output	Independently connect to V_{DD0} via a resistor.
P50/A8 to P57/A15			Independently connect to V_{DD0} or V_{SS0} via a resistor.
P64/$\overline{\text{RD}}$			
P65/$\overline{\text{WR}}$			
P66/$\overline{\text{WAIT}}$			
P67/ASTB			
P70/TI00/TO0	8-C		
P71/TI01			
P72/TI50/TO50			
P73/TI51/TO51			
P74/PCL	5-H		
P75/BUZ			
$\overline{\text{RESET}}$	2	Input	—
XT1	16		Connect to V_{DD0}.
XT2		—	Leave open
AV_{DD}	—		Connect to V_{DD0}.
★ AV_{REF}			Connect directly to V_{SS0}.
★ AV_{SS}			
★ IC			Internally connected. Connect directly to V_{SS0} or V_{SS1}.

Figure 3-1. Pin Input/Output Circuits

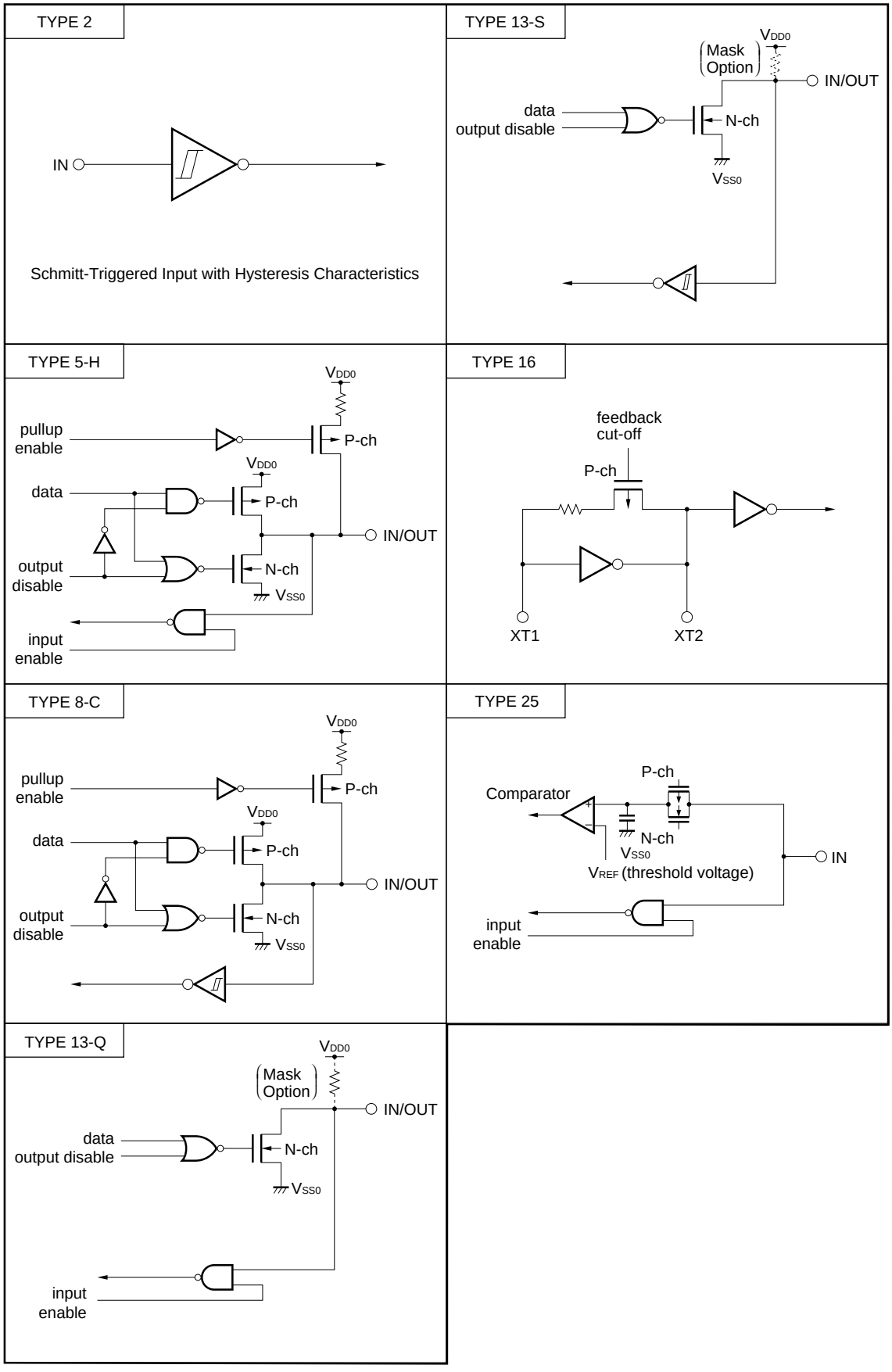

4. MEMORY SPACE

Figure 4-1 shows the memory map of the μPD780031, 780032, 780033, and 780034.

Figure 4-1. Memory Map

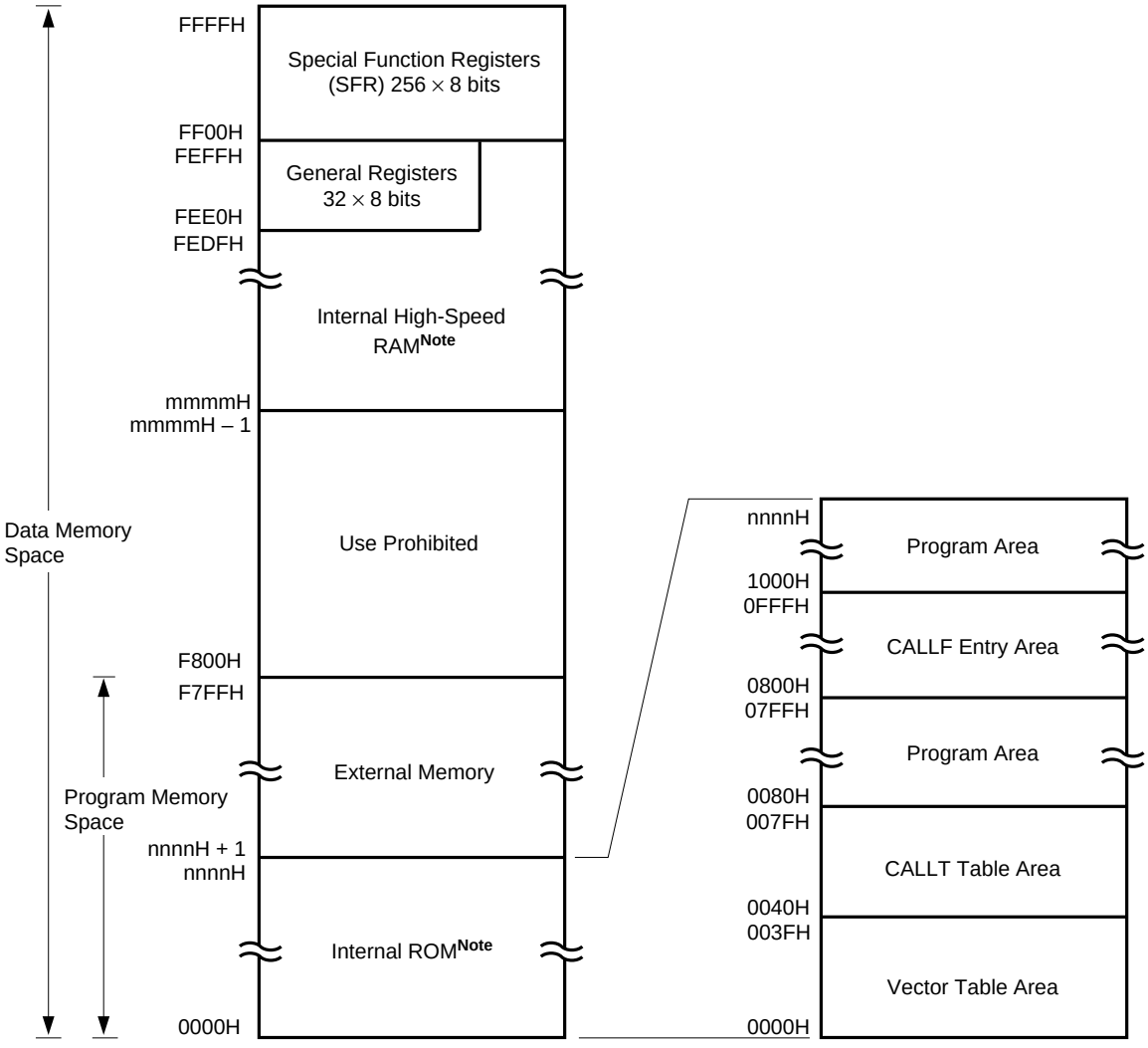

Note The internal ROM capacity and internal high-speed RAM capacity depend on the products (see the following table).

Part Number	Internal ROM Last Address nnnnH	Internal High-Speed RAM Start Address mmmmH
μPD780031	1FFFH	FD00H
μPD780032	3FFFH	
μPD780033	5FFFH	FB00H
μPD780034	7FFFH	

5. PERIPHERAL HARDWARE FUNCTION FEATURES

5.1 Ports

The following 3 types of I/O ports are available.

- CMOS input (Port 1) : 8
- CMOS input/output (Port 0, Port 2 to Port 7) : 39
- N-channel open-drain input/output (P30 to P33) : 4

Total : 51

Table 5-1. Port Functions

Name	Pin Name	Function
Port 0	P00 to P03	Input/output port pins. Input/output specifiable bit-wise. When used as input port pins, on-chip pull-up resistor can be used by software.
Port 1	P10 to P17	Dedicated input port pins.
Port 2	P20 to P25	Input/output port pins. Input/output specifiable bit-wise. When used as input port pins, on-chip pull-up resistor can be used by software.
Port 3	P30 to P33	N-channel open-drain input/output port pins. Input/output specifiable bit-wise. On-chip pull-up resistor can be used by mask option. LED can be driven directly.
	P34 to P36	Input/output port pins. Input/output specifiable bit-wise. When used as input port pins, on-chip pull-up resistor can be used by software.
Port 4	P40 to P47	Input/output port pins. Input/output specifiable bit-wise. When used as input port pins, on-chip pull-up resistor can be used by software. Test input flag (KRIF) is set to 1 by falling edge detection.
Port 5	P50 to P57	Input/output port pins. Input/output specifiable bit-wise. When used as input port pins, on-chip pull-up resistor can be used by software. LED can be driven directly.
Port 6	P64 to P67	Input/output port pins. Input/output specifiable bit-wise. When used as input port pins, on-chip pull-up resistor can be used by software.
Port 7	P70 to P75	Input/output port pins. Input/output specifiable bit-wise. When used as input port pins, on-chip pull-up resistor can be used by software.

5.2 Clock Generator

A system clock generator is incorporated.

The minimum instruction execution time can also be changed.

- 0.24 μs/0.48 μs/0.95 μs/1.91 μs/3.81 μs (main system clock: at 8.38-MHz operation)
- 122 μs (subsystem clock: at 32.768-kHz operation)

Figure 5-1. Block Diagram of Clock Generator

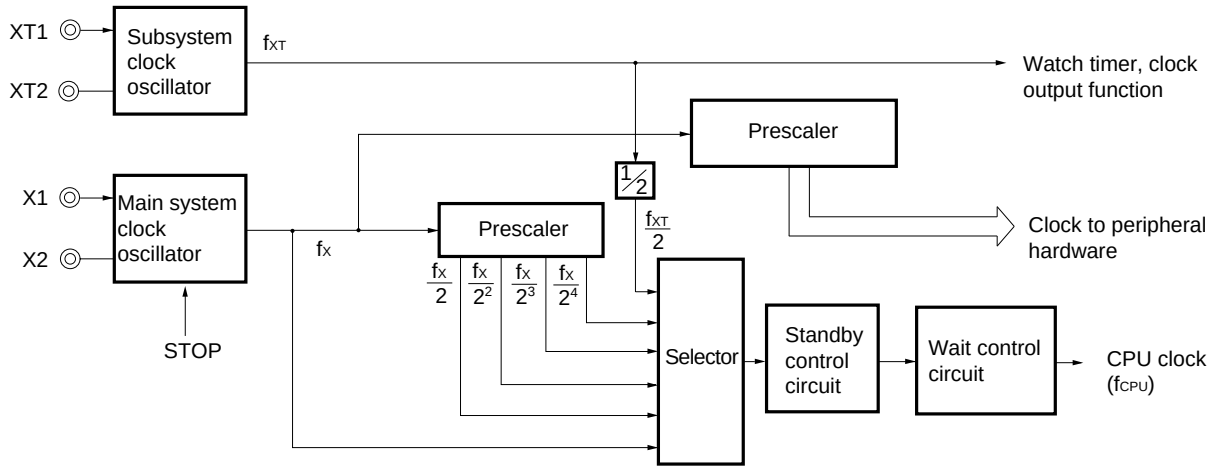

5.3 Timer/Counter

Five timer/counter channels are incorporated.

- 16-bit timer/event counter : 1 channel
- 8-bit timer/event counter : 2 channels
- Watch timer : 1 channel
- Watchdog timer : 1 channel

Table 5-2. Operations of Timer/Event Counter

		16-Bit Timer/ Event Counter TM0	8-Bit Timer/ Event Counter TM50, TM51	Watch Timer	Watchdog Timer
Operation mode					
	Interval timer	2 channels[Note 1]	2 channels	1 channel[Note 2]	1 channel[Note 3]
	External event counter	1 channel	2 channels	—	—
Function					
	Timer output	1 output	2 outputs	—	—
	PWM output	—	2 outputs	—	—
	Pulse width measurement	2 inputs	—	—	—
	Square wave output	1 output	2 outputs	—	—
	One-shot pulse output	1 output	—	—	—
	Interrupt source	2	2	2	1

Notes 1. When capture/compare registers 00, 01 (CR00, CR01) are both specified as compare registers

2. The watch timer can perform both watch timer and interval timer functions at the same time.

3. The watchdog timer has the watchdog timer and interval timer functions. However, use the watchdog timer by selecting either the watchdog timer function or the interval timer function.

Figure 5-2. Block Diagram of 16-bit Timer/Event Counter TM0

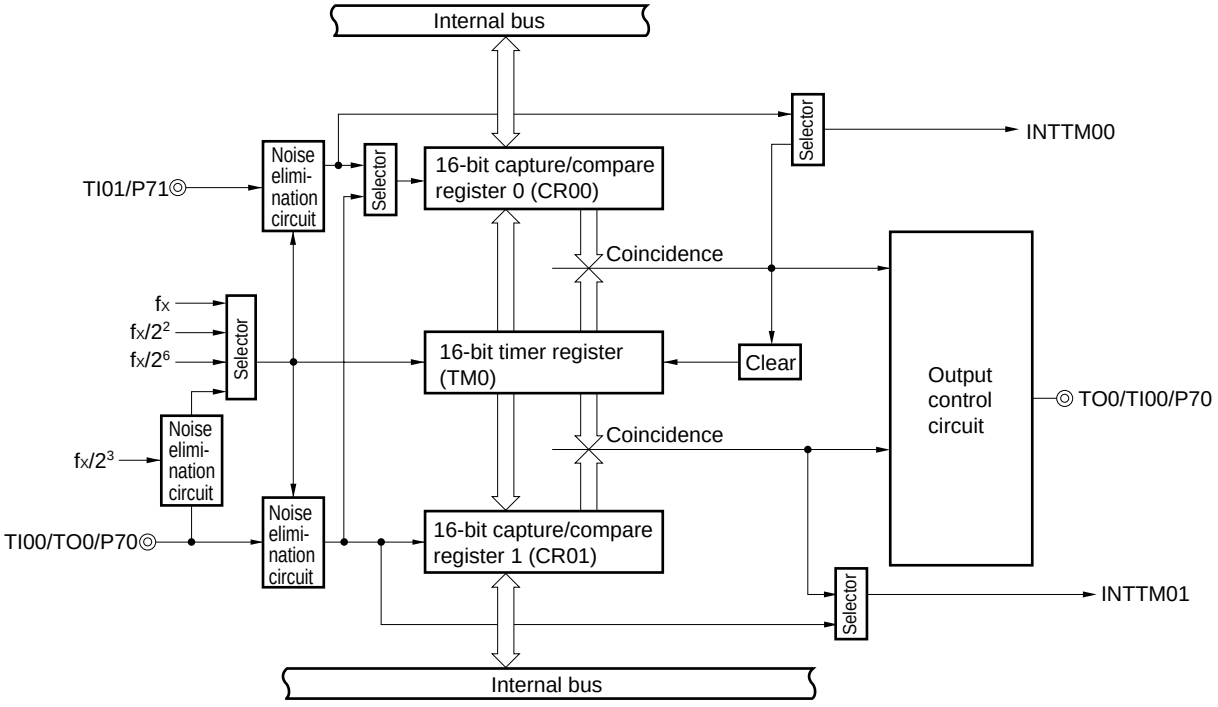

Figure 5-3. Block Diagram of 8-bit Timer/Event Counter TM50

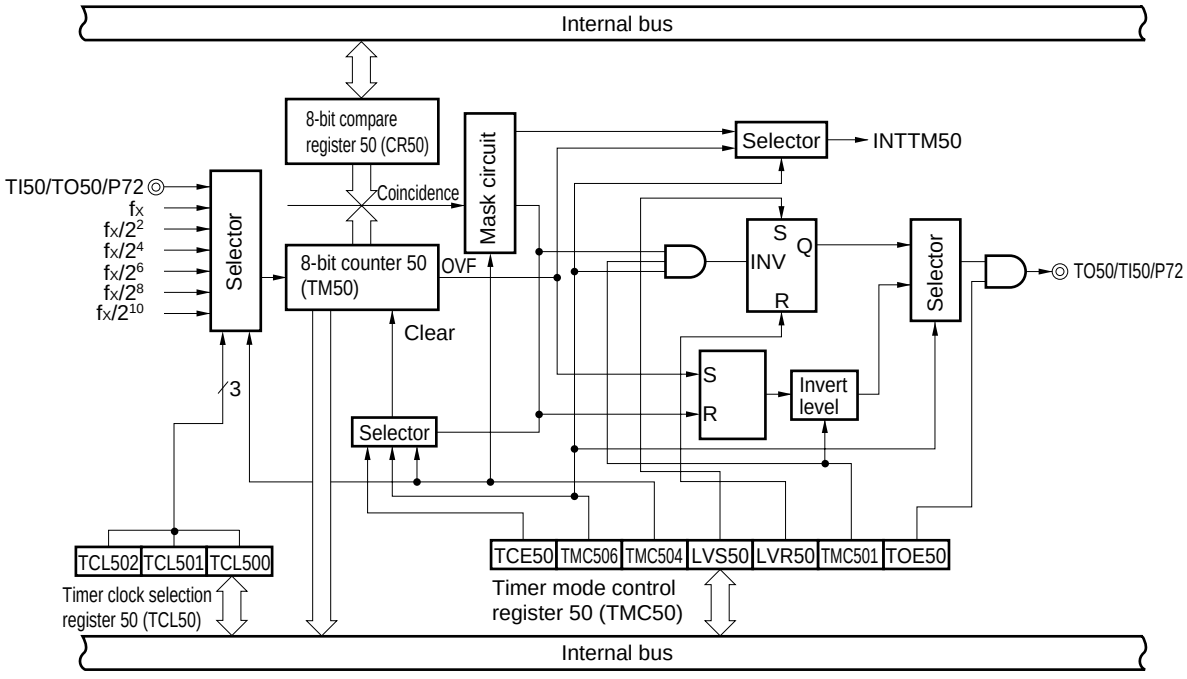

Figure 5-4. Block Diagram of 8-bit Timer/Event Counter TM51

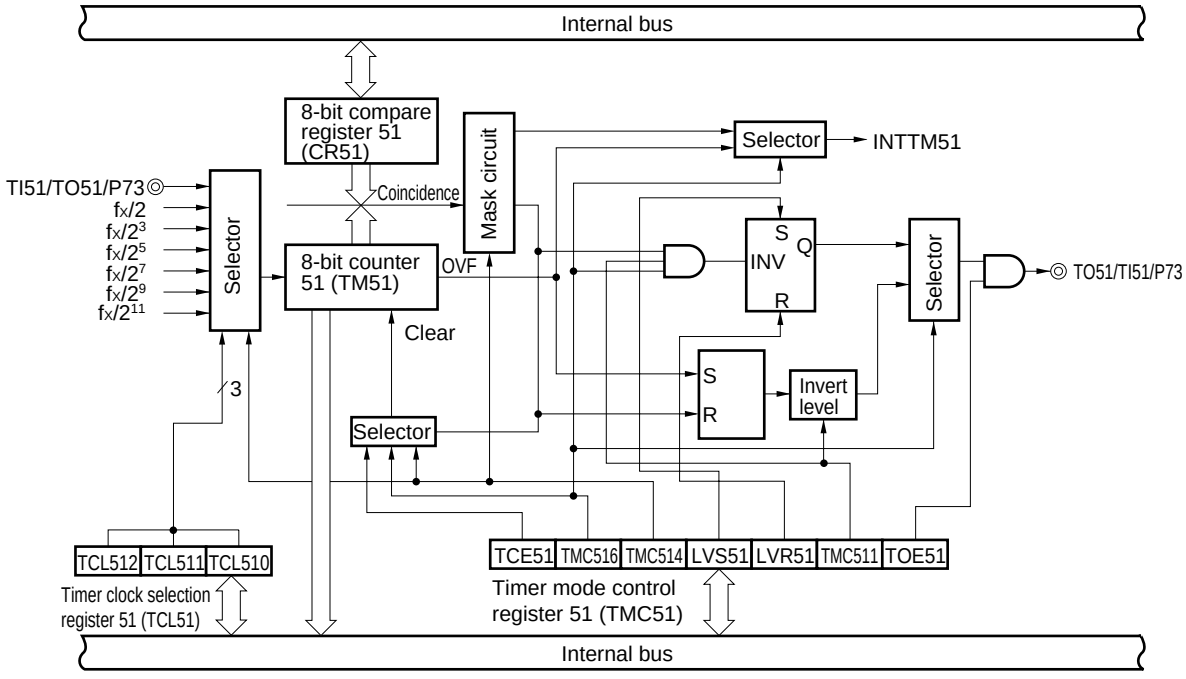

Figure 5-5. Block Diagram of Watch Timer

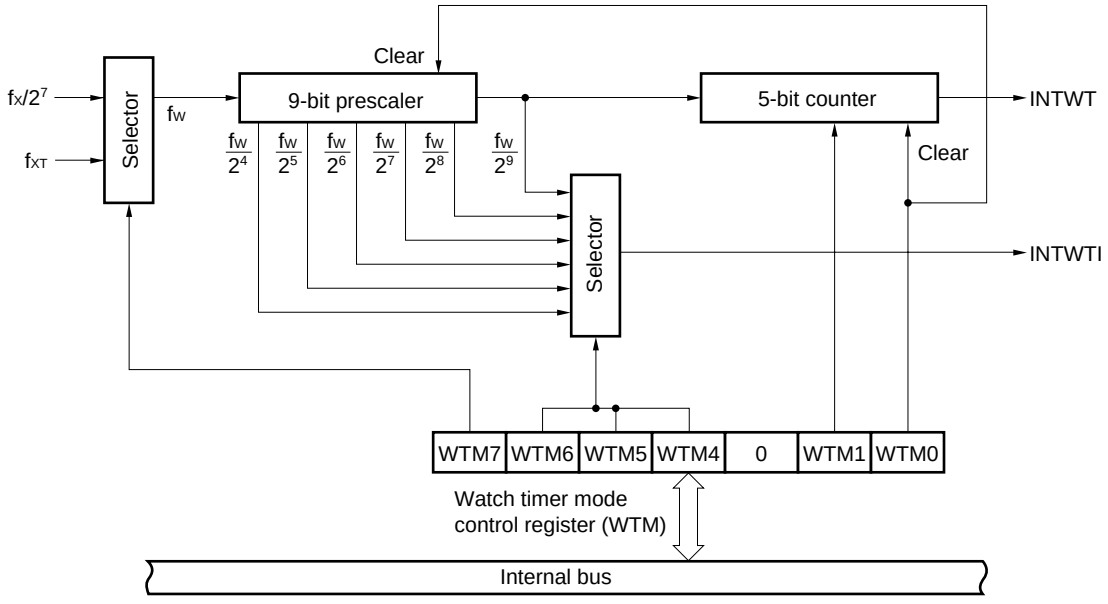

★ **Figure 5-6. Block Diagram of Watchdog Timer**

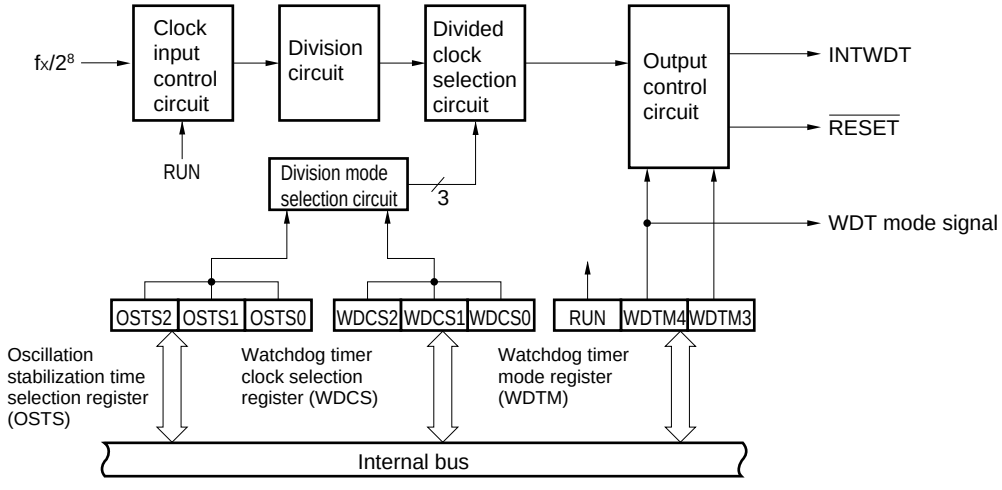

5.4 Clock Output/Buzzer Output Control Circuit

A clock output/buzzer output control circuit (CKU) is incorporated.

Clocks with the following frequencies can be output as a clock output.

- 65.5 kHz/131 kHz/262 kHz/524 kHz/1.05 MHz/2.10 MHz/4.19 MHz/8.38 MHz (main system clock: at 8.38-MHz operation)
- 32.768 kHz (subsystem clock: at 32.768-kHz operation)

Clocks with the following frequencies can be output as a buzzer output.

- 1.02 kHz/2.05 kHz/4.10 kHz/8.19 kHz (main system clock: at 8.38-MHz operation)

★ **Figure 5-7. Block Diagram of Clock Output/Buzzer Output Control Circuit CKU**

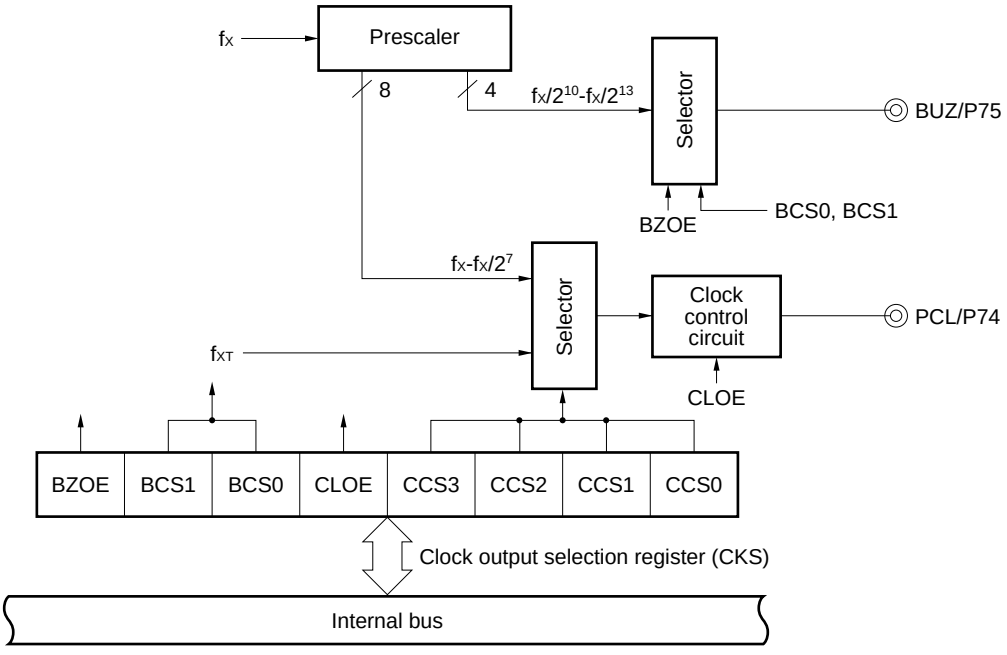

5.5 A/D Converter

An A/D converter of 8-bit resolution × 8 channels is incorporated.

The following two types of the A/D conversion operation start-up methods are available.

- Hardware start
- Software start

Figure 5-8. Block Diagram of A/D Converter

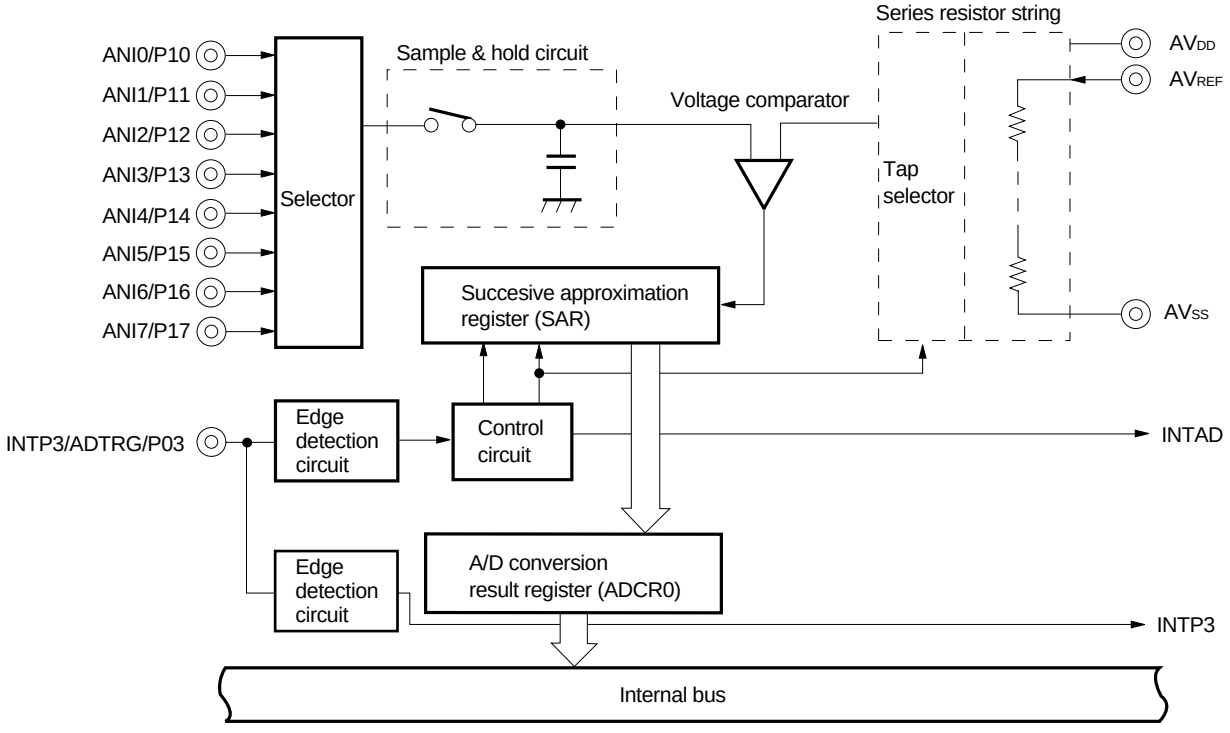

5.6 Serial Interface

Three channels of the serial interface are incorporated.

- Serial interface UART0 : 1 channel
- Serial interface SIO3n (n = 0, 1): 2 channels

(1) Serial interface UART0

The serial interface UART0 has two modes, asynchronous serial interface (UART) mode and infrared data transfer mode.

- **Asynchronous serial interface (UART) mode**

  This mode enables full-duplex operation wherein one byte of data is transmitted and received after the start bit.

  The on-chip dedicated UART baud rate generator enables communication using a wide range of selectable baud rates. In addition, a baud rate can be also defined by dividing the clock input to the ASCK0 pin.

  The dedicated UART baud rate generator can also be used to generate a MIDI-standard baud rate (31.25 kbps).

★ - **Infrared data transfer mode**

  This mode enables pulse output and pulse reception in data format.

  This mode can be used for office equipment applications such as personal computers.

Figure 5-9. Block Diagram of Serial Interface UART0

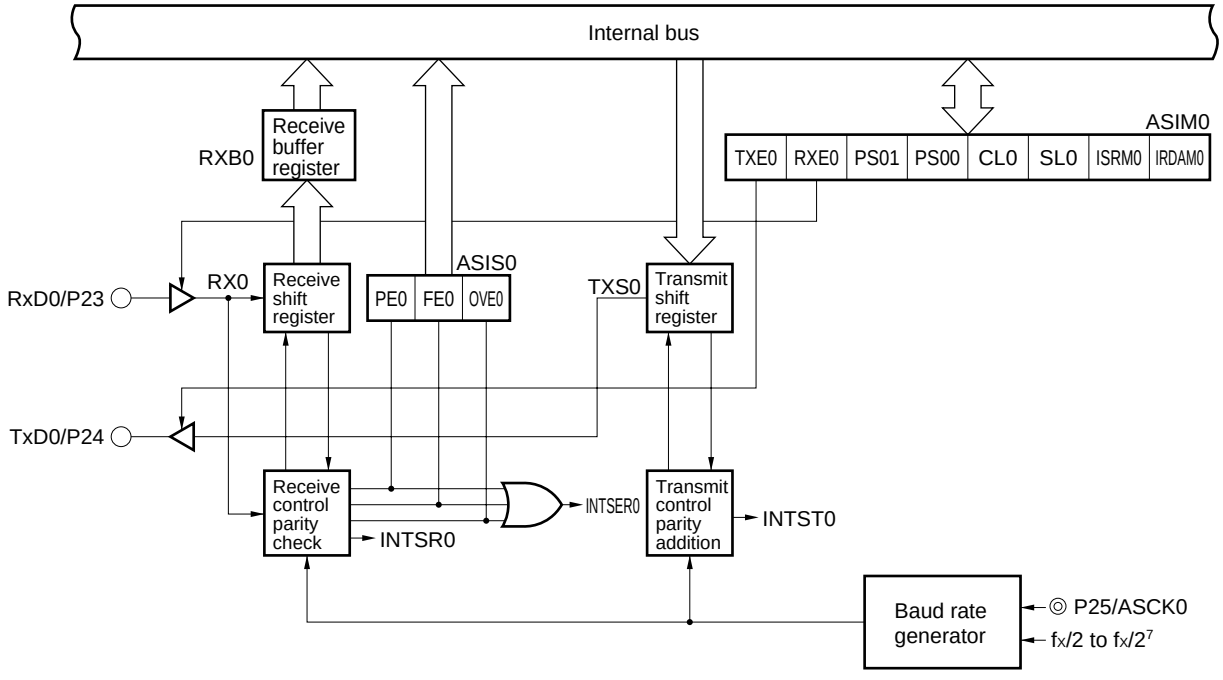

(2) Serial interface SIO3n (n = 0, 1)

The serial interface SIO3n has the 3-wire serial I/O mode.

- **3-wire serial I/O mode (fixed as MSB first)**

  This is an 8-bit data transfer mode using three lines: a serial clock line ($\overline{\text{SCK3n}}$), serial output line (SO3n), and serial input line (SI3n).

  Since simultaneous transmit and receive operations are enabled in the 3-wire serial I/O mode, the processing time for data transfer is reduced.

  The first bit in 8-bit data in the serial transfer is fixed as MSB.

  The 3-wire serial I/O mode is useful for connection to a peripheral I/O device that includes a clocked serial interface, a display controller, etc.

Figure 5-10. Block Diagram of Serial Interface SIO3n

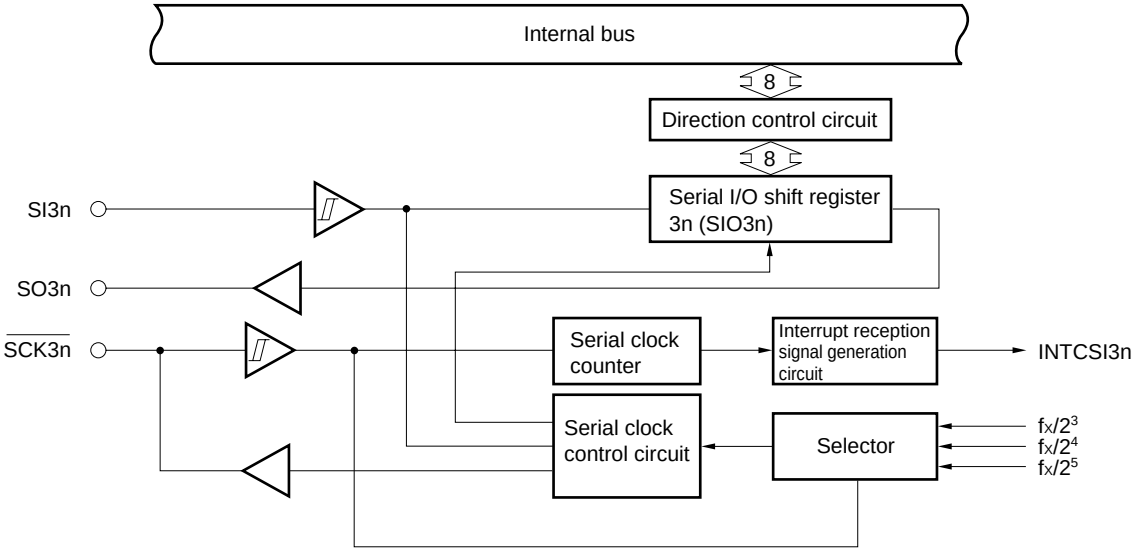

Remark n = 0, 1

6. INTERRUPT FUNCTIONS

There are 20 interrupt functions of three different types, as shown below.

- Non-maskable: 1
- Maskable : 18
- Software : 1

Table 6-1. Interrupt Source List

Type of Interrupt	Default Priority[Note 1]	Interrupt Source		Internal/ External	Vector Table Address	Basic Configuration Type[Note 2]
		Name	Trigger			
Non-maskable	—	INTWDT	Watchdog timer overflow (watchdog timer mode 1 selected)	Internal	0004H	(A)
Maskable	0	INTWDT	Watchdog timer overflow (interval timer mode selected)			(B)
	1	INTP0	Pin input edge detection	External	0006H	(C)
	2	INTP1			0008H	
	3	INTP2			000AH	
	4	INTP3			000CH	
	5	INTSER0	Generation of serial interface UART0 reception error	Internal	000EH	(B)
	6	INTSR0	End of serial interface UART0 reception		0010H	
	7	INTST0	End of serial interface UART0 transmission		0012H	
	8	INTCSI30	End of serial interface SIO3 (SIO30) transfer		0014H	
	9	INTCSI31	End of serial interface SIO3 (SIO31) transfer		0016H	
	10	INTWTI	Reference time interval signal from watch timer		001AH	
	11	INTTM00	Generation of coincidence signal of 16-bit timer register and capture/compare register 00 (CR00) (when CR00 specified as compare register)		001CH	
	12	INTTM01	Generation of coincidence signal of 16-bit timer register and capture/compare register 01 (CR01) (when CR01 specified as compare register)		001EH	
	13	INTTM50	Generation of coincidence signal of 8-bit timer/event counter 50		0020H	
	14	INTTM51	Generation of coincidence signal of 8-bit timer/event counter 51		0022H	
	15	INTAD0	End of conversion by A/D converter		0024H	
	16	INTWT	Watch timer overflow		0026H	
	17	INTKR	Falling edge detection of port 4	External	0028H	(D)
Software	—	BRK	BRK instruction execution	—	003EH	(E)

Notes 1. The default priority is a priority order when two or more maskable interrupt requests are generated simultaneously. 0 is the highest order and 17, the lowest.

2. Basic configuration types (A) to (E) correspond to (A) to (E) in Figure 6-1, respectively.

Figure 6-1. Basic Configuration of Interrupt Function (1/2)

(A) Internal non-maskable interrupt

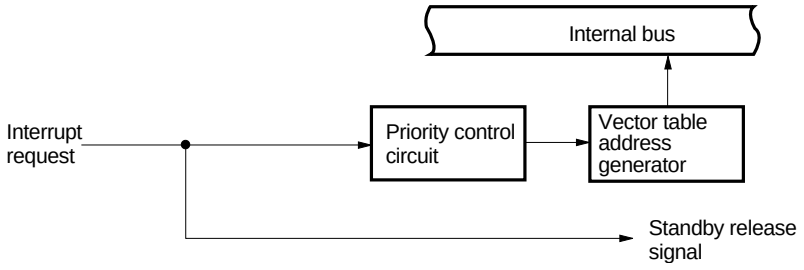

(B) Internal maskable interrupt

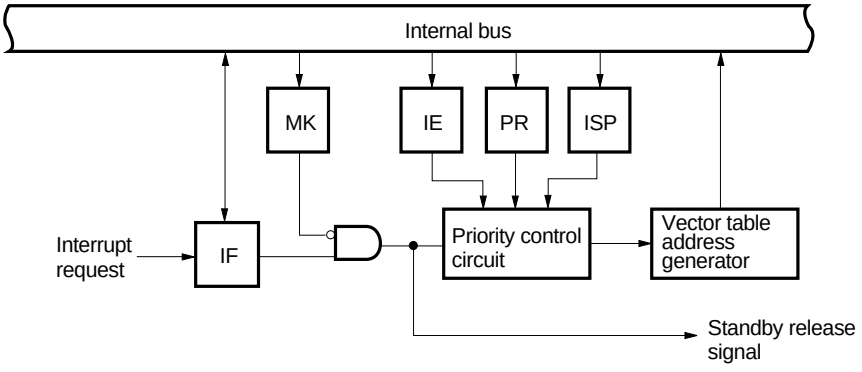

(C) External maskable interrupt (INTP0 to INTP3)

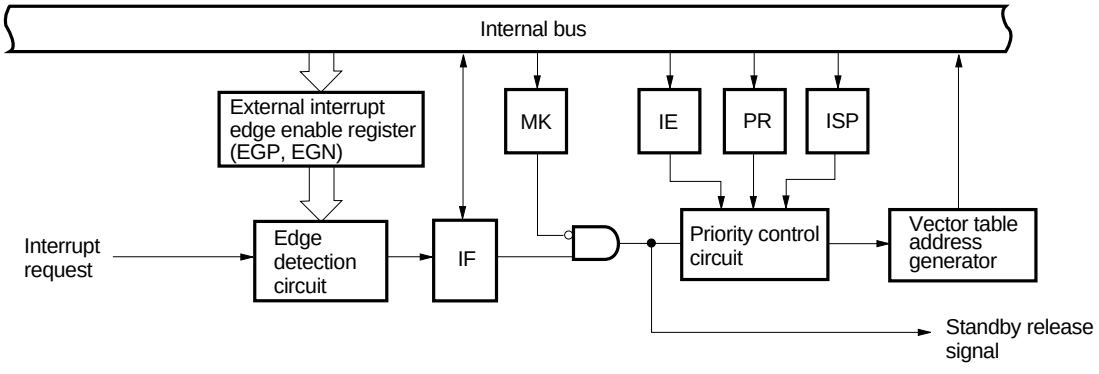

Figure 6-1. Basic Configuration of Interrupt Function (2/2)

(D) External maskable interrupt (INTKR)

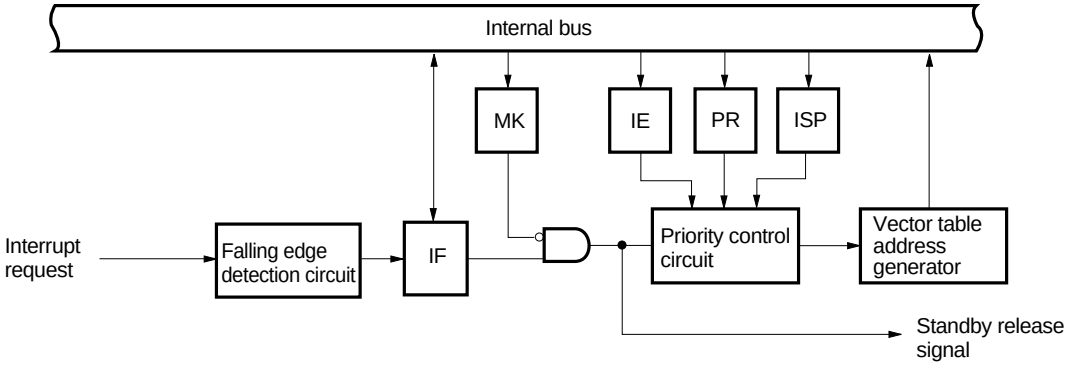

(E) Software interrupt

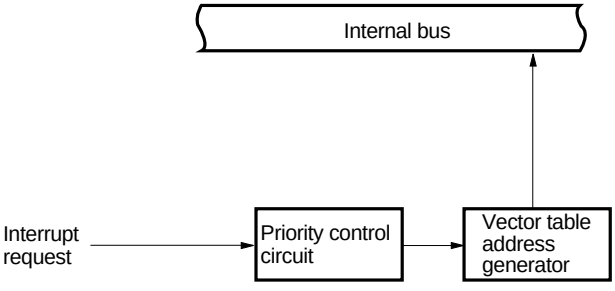

IF : Interrupt request flag
IE : Interrupt enable flag
ISP : In-service priority flag
MK : Interrupt mask flag
PR : Priority specification flag

7. EXTERNAL DEVICE EXPANSION FUNCTIONS

The external device expansion functions connect external devices to areas other than the internal ROM, RAM and SFR. Ports 4 to 6 are used for external device connection.

8. STANDBY FUNCTIONS

There are the following two standby functions to reduce the consumption current.

- HALT mode: The CPU operating clock is stopped. The average consumption current can be reduced by intermittent operation in combination with the normal operating mode.
- STOP mode: The system clock oscillation is stopped. The whole operation by the system clock is stopped, so that the system operates with ultra-low power consumption.

Figure 8-1. Standby Function

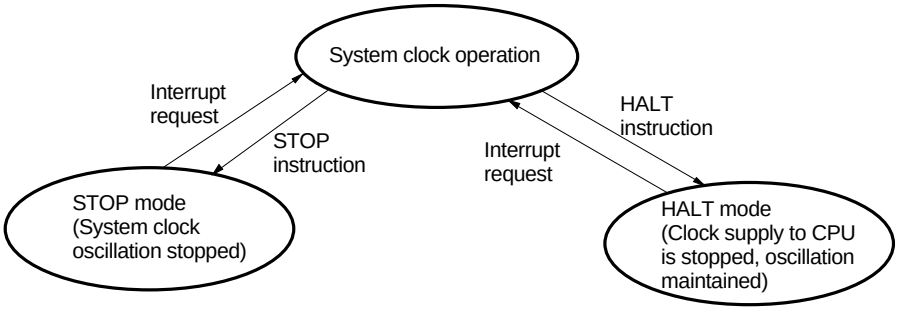

9. RESET FUNCTION

There are the following two reset methods.

- External reset by $\overline{\text{RESET}}$ pin
- Internal reset by watchdog timer runaway time detection

10. INSTRUCTION SET

(1) 8-bit instructions

MOV, XCH, ADD, ADDC, SUB, SUBC, AND, OR, XOR, CMP, MULU, DIVUW, INC, DEC, ROR, ROL, RORC, ROLC, ROR4, ROL4, PUSH, POP, DBNZ

Second operand / First operand	#byte	A	r[Note]	sfr	saddr	!addr16	PSW	[DE]	[HL]	[HL + byte] [HL + B] [HL + C]	$addr16	1	None
A	ADD ADDC SUB SUBC AND OR XOR CMP		MOV XCH ADD ADDC SUB SUBC AND OR XOR CMP	MOV XCH	MOV XCH ADD ADDC SUB SUBC AND OR XOR CMP	MOV XCH ADD ADDC SUB SUBC AND OR XOR CMP	MOV	MOV XCH	MOV XCH ADD ADDC SUB SUBC AND OR XOR CMP	MOV XCH ADD ADDC SUB SUBC AND OR XOR CMP		ROR ROL RORC ROLC	
r	MOV	MOV ADD ADDC SUB SUBC AND OR XOR CMP											INC DEC
B, C											DBNZ		
sfr	MOV	MOV											
saddr	MOV ADD ADDC SUB SUBC AND OR XOR CMP	MOV									DBNZ		INC DEC
!addr16		MOV											
PSW	MOV	MOV											PUSH POP
[DE]		MOV											
[HL]		MOV											ROR4 ROL4
[HL + byte] [HL + B] [HL + C]		MOV											
X													MULU
C													DIVUW

Note Except r = A

(2) 16-bit instructions

MOVW, XCHW, ADDW, SUBW, CMPW, PUSH, POP, INCW, DECW

Second operand / First operand	#word	AX	rp[Note]	sfrp	saddrp	!addr16	SP	None
AX	ADDW SUBW CMPW		MOVW XCHW	MOVW	MOVW	MOVW	MOVW	
rp	MOVW	MOVW[Note]						INCW, DECW PUSH, POP
sfrp	MOVW	MOVW						
saddrp	MOVW	MOVW						
!addr16		MOVW						
SP	MOVW	MOVW						

Note Only when rp = BC, DE or HL

(3) Bit manipulation instructions

MOV1, AND1, OR1, XOR1, SET1, CLR1, NOT1, BT, BF, BTCLR

Second operand / First operand	A.bit	sfr.bit	saddr.bit	PSW.bit	[HL].bit	CY	$addr16	None
A.bit						MOV1	BT BF BTCLR	SET1 CLR1
sfr.bit						MOV1	BT BF BTCLR	SET1 CLR1
saddr.bit						MOV1	BT BF BTCLR	SET1 CLR1
PSW.bit						MOV1	BT BF BTCLR	SET1 CLR1
[HL].bit						MOV1	BT BF BTCLR	SET1 CLR1
CY	MOV1 AND1 OR1 XOR1	MOV1 AND1 OR1 XOR1	MOV1 AND1 OR1 XOR1	MOV1 AND1 OR1 XOR1	MOV1 AND1 OR1 XOR1			SET1 CLR1 NOT1

(4) Call instruction/branch instructions

CALL, CALLF, CALLT, BR, BC, BNC, BZ, BNZ, BT, BF, BTCLR, DBNZ

Second operand / First operand	AX	!addr16	!addr11	[addr5]	$addr16
Basic instruction	BR	CALL BR	CALLF	CALLT	BR, BC, BNC BZ, BNZ
Compound instruction					BT, BF BTCLR DBNZ

(5) Other instructions

ADJBA, ADJBS, BRK, RET, RETI, RETB, SEL, NOP, EI, DI, HALT, STOP

★ 11. ELECTRICAL SPECIFICATIONS

Absolute Maximum Ratings (T_A = 25°C)

Parameter	Symbol	Test Conditions			Ratings	Unit
Supply voltage	V_{DD}				–0.3 to +6.5	V
	AV_{DD}				–0.3 to V_{DD} + 0.3	V
	AV_{REF}				–0.3 to V_{DD} + 0.3	V
	AV_{SS}				–0.3 to +0.3	V
Input voltage	V_{I1}	P00 to P03, P10 to P17, P20 to P25, P34 to P36, P40 to P47, P50 to P57, P64 to P67, P70 to P75, X1, X2, XT1, XT2, $\overline{\text{RESET}}$			–0.3 to V_{DD} + 0.3	V
	V_{I2}	P30 to P33	N-ch open-drain		–0.3 to V_{DD} + 0.3	V
Output voltage	V_O				–0.3 to V_{DD} + 0.3	V
Analog input voltage	V_{AN}	P10 to P17	Analog input pin		AV_{SS} – 0.3 to AV_{REF0} + 0.3 and –0.3 to V_{DD} + 0.3	V
High-level output current	I_{OH}	Per pin			–10	mA
		Total for P00 to P03, P40 to P47, P50 to P57, P64 to P67, P70 to P75			–15	mA
		Total for P20 to P25, P30 to P36			–15	mA
Low-level output current	I_{OL} **Note**	Per pin for P00 to P03, P20 to P25, P34 to P36, P40 to P47, P64 to P67, P70 to P75		Peak value	20	mA
				Effective value	10	mA
		Per pin for P30 to P33, P50 to P57		Peak value	30	mA
				Effective value	15	mA
		Total for P00 to P03, P40 to P47, P64 to P67, P70 to P75		Peak value	50	mA
				Effective value	20	mA
		Total for P20 to P25		Peak value	20	mA
				Effective value	10	mA
		Total for P30 to P36		Peak value	100	mA
				Effective value	70	mA
		Total for P50 to P57		Peak value	100	mA
				Effective value	70	mA
Operating ambient tempature	T_A			Peak value	–40 to +85	°C
Storage temperature	T_{stg}			Effective value	–65 to +150	°C

Note The effective value should be calculated as follows: [Effective value] = [Peak value] × $\sqrt{\text{duty}}$

Caution **Product quality may suffer if the absolute maximum rating is exceeded even momentarily for any parameter. That is, the absolute maximum ratings are rated values at which the product is on the verge of suffering physical damage, and therefore the product must be used under conditions that ensure that the absolute maximum ratings are not exceeded.**

Capacitance (T_A = 25°C, V_{DD} = V_{SS} = 0 V)

Parameter	Symbol	Test Conditions		MIN.	TYP.	MAX.	Unit
Input capacitance	C_{IN}	f = 1 MHz Unmeasured pins returned to 0 V.				15	pF
I/O capacitance	C_{IO}	f = 1 MHz Unmeasured pins returned to 0 V.	P00 to P03, P20 to P25, P34 to P36, P40 to P47, P50 to P57, P64 to P67, P70 to P75			15	pF
			P30 to P33			20	pF

Remark Unless specified otherwise, alternate-function pin characteristics are the same as port pin characteristics.

Main System Clock Oscillation Circuit Characteristics (T_A = –40 to 85°C, V_{DD} = 1.8 to 5.5 V)

Resonator	Recommended Circuit	Parameter	Test Conditions	MIN.	TYP.	MAX.	Unit
Ceramic resonator	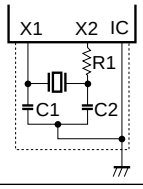	Oscillation frequency (f_X)Note 1	V_{DD} = 4.5 to 5.5 V	1.0		8.38	MHz
				1.0		5.0	
		Oscillation stabilization timeNote 2	After V_{DD} reaches oscillation voltage range MIN.			4	ms
Crystal resonator	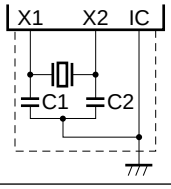	Oscillator frequency (f_X)Note 1	V_{DD} = 4.5 to 5.5 V	1.0		8.38	MHz
				1.0		5.0	
		Oscillation stabilization timeNote 2	V_{DD} = 4.5 to 5.5 V			10	ms
						30	
External clock	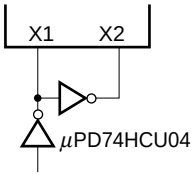	X1 input frequency (f_X)Note 1	V_{DD} = 4.5 to 5.5 V	1.0		8.38	MHz
						5.0	
		X1 input high-/low-level width (t_{XH} , t_{XL})	V_{DD} = 4.5 to 5.5 V	50		500	ns
				85		500	

Notes 1. Indicates only oscillation circuit characteristics. Refer to AC Characteristics for instruction execution time.

2. Time required to stabilize oscillation after reset or STOP mode release.

Cautions 1. When using the main system clock oscillator, wiring in the area enclosed with the broken line in the above figures should be carried out as follows to avoid an adverse effect from wiring capacitance.

- **Keep the wiring length as short as possible.**
- **Do not cross the wiring with the other signal lines.**
- **Do not route the wiring near a signal line through which a high fluctuating current flows.**
- **Always keep the ground point of the oscillator to the same potential as V_{SS1}.**
- **Do not ground the capacitor to a ground pattern in which a high current flows.**
- **Do not fetch signals from the oscillator.**

2. When the main system clock is stopped and the system is operated by the subsystem clock, the subsystem clock should be switched again to the main system clock after the oscillation stabilization time is secured by the program.

Subsystem Clock Oscillation Circuit Characteristics (T_A = –40 to +85°C, V_{DD} = 1.8 to 5.5 V)

Resonator	Recommended Circuit	Parameter	Test Conditions	MIN.	TYP.	MAX.	Unit
Crystal resonator	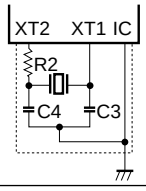	Oscillation frequency (f_{XT})**Note 1**		32	32.768	35	kHz
		Oscillation stabilization time**Note 2**	V_{DD} = 4.5 to 5.5 V		1.2	2	s
						10	
External clock	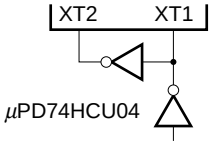	XT1 input frequency (f_{XT})**Note 1**		32		100	kHz
		XT1 input high-/low-level width (t_{XTH} , t_{XTL})		5		15	μs

Notes 1. Indicates only oscillation circuit characteristics. Refer to AC Characteristics for instruction execution time.

2. Time required to stabilize oscillation after V_{DD} reaches oscillation voltage MIN.

Cautions 1. When using the subsystem clock oscillator, wiring in the area enclosed with the broken line in the above figures should be carried out as follows to avoid an adverse effect from wiring capacitance.

- **Keep the wiring length as short as possible.**
- **Do not cross the wiring with the other signal lines.**
- **Do not route the wiring near a signal line through which a high fluctuating current flows.**
- **Always keep the ground point of the oscillator to the same potential as V_{SS1}.**
- **Do not ground the capacitor to a ground pattern in which a high current flows.**
- **Do not fetch signals from the oscillator.**

2. The subsystem clock oscillator is a low-amplitude circuit in order to achieve a low consumption current, and is more prone to malfunction due to noise than the main system clock oscillator. Particular care is therefore required with the wiring method when the subsystem clock is used.

DC Characteristics (T_A = –40 to +85°C, V_{DD} = 1.8 to 5.5 V)

Parameter	Symbol	Test Conditions		MIN.	TYP.	MAX.	Unit
Input voltage, high	V_{IH1}	P10 to P17, P21, P24, P35, P40 to P47, P50 to P57, P64 to P67, P74, P75	V_{DD} = 2.7 to 5.5 V	0.7 V_{DD}		V_{DD}	V
				0.8 V_{DD}		V_{DD}	V
	V_{IH2}	P00 to P03, P20, P22, P23, P25, P34, P36, P70 to P73, $\overline{\text{RESET}}$	V_{DD} = 2.7 to 5.5 V	0.8 V_{DD}		V_{DD}	V
				0.85 V_{DD}		V_{DD}	V
	V_{IH3}	P30-P33 (N-ch open-drain)	V_{DD} = 2.7 to 5.5 V	0.7 V_{DD}		5.5	V
				0.8 V_{DD}		5.5	V
	V_{IH4}	X1, X2	V_{DD} = 2.7 to 5.5 V	V_{DD}–0.5		V_{DD}	V
				V_{DD}–0.2		V_{DD}	V
	V_{IH5}	XT1, XT2	V_{DD} = 4.5 to 5.5 V	0.8 V_{DD}		V_{DD}	V
				0.9 V_{DD}		V_{DD}	V
Input voltage, low	V_{IL1}	P10 to P17, P21, P24, P35, P40 to P47, P50 to P57, P64 to P67, P74, P75	V_{DD} = 2.7 to 5.5 V	0		0.3 V_{DD}	V
				0		0.2 V_{DD}	V
	V_{IL2}	P00 to P03, P20, P22, P23, P25, P34, P36, P70 to P73, $\overline{\text{RESET}}$	V_{DD} = 2.7 to 5.5 V	0		0.2 V_{DD}	V
				0		0.15 V_{DD}	V
	V_{IL3}	P30 to P33	4.5 V ≤ V_{DD} ≤ 5.5 V	0		0.3 V_{DD}	V
			2.7 V ≤ V_{DD} < 4.5 V	0		0.2 V_{DD}	V
			1.8 V ≤ V_{DD} < 2.7 V	0		0.1 V_{DD}	V
	V_{IL4}	X1, X2	V_{DD} = 2.7 to 5.5 V	0		0.4	V
				0		0.2	V
	V_{IL5}	XT1, XT2	V_{DD} = 4.5 to 5.5 V	0		0.2 V_{DD}	V
				0		0.1 V_{DD}	V
Output voltage, high	V_{OH}	V_{DD} = 4.5 to 5.5 V, I_{OH} = –1mA		V_{DD}–1.0		V_{DD}	V
		I_{OH} = –100 μA		V_{DD}–0.5		V_{DD}	V
Output voltage, low	V_{OL1}	P30 to P33, P50 to P57	V_{DD} = 4.5 to 5.5 V, I_{OL} = 15 mA		0.4	2.0	V
		P00 to P03, P20 to P25, P34 to P36, P40 to P47, P64 to P67, P70 to P75	V_{DD} = 4.5 to 5.5 V, I_{OL} = 1.6 mA			0.4	V
	V_{OL2}	I_{OL} = 400 μA				0.5	V

Remark Unless specified otherwise, alternate-function pin characteristics are the same as port pin characteristics.

DC Characteristics (T_A = –40 to +85°C, V_{DD} = 1.8 to 5.5 V)

Parameter	Symbol	Test Conditions		MIN.	TYP.	MAX.	Unit
Input leakage current, high	I_{LIH1}	V_{IN} = V_{DD}	P00 to P03, P10 to P17, P20 to P25, P34 to P36, P40 to P47, P50 to P57, P60 to P67, P70 to P75, $\overline{\text{RESET}}$			3	μA
	I_{LIH2}		X1, X2, XT1, XT2			20	μA
	I_{LIH3}	V_{IN} = 5.5 V	P30 to P33			80	μA
Input leakage current, low	I_{LIL1}	V_{IN} = 0 V	P00 to P03, P10 to P17, P20 to P25, P34 to P36, P40 to P47, P50 to P57, P64 to P67, P70 to P75, $\overline{\text{RESET}}$			–3	μA
	I_{LIL2}		X1, X2, XT1, XT2			–20	μA
	I_{LIL3}		P30 to P33			–3 **Note**	μA
Output leakage current, high	I_{LOH}	V_{OUT} = V_{DD}				3	μA
Output leakage current, low	I_{LOL}	V_{OUT} = 0 V				–3	μA
Mask option pull-up resistor	R_1	V_{IN} = 0 V, P60 to P63 P30 to P33		15	30	90	kΩ
Software pull-up resistor	R_2	V_{IN} = 0 V, P00 to P03, P20 to P25, P34 to P36, P40 to P47, P50 to P57, P64 to P67, P70 to P75		15	30	90	kΩ

Note When the pull-up resistor is not included in P30 to P33 (specified by a mask option), a –200 μA (MAX.) low-level input leakage current flows only at the 3-clock interval (no wait) when the read instruction to port 3 (PM3) and port mode register 3 (PM3) is executed. At times other than this 3-clock interval, a –3 μA (MAX.) current flows.

Remark Unless specified otherwise, alternate-function pin characteristics are the same as port pin characteristics.

DC Characteristics (T_A = –40 to +85°C, V_{DD} = 1.8 to 5.5 V)

Parameter	Symbol	Test Conditions		MIN.	TYP.	MAX.	Unit
Power supply current[Note 1]	I_{DD1}	8.38-MHz crystal oscillation operating mode	V_{DD} = 5.0 V ±10%		8	16	mA
	I_{DD2}	8.38-MHz crystal oscillation HALT mode	V_{DD} = 5.0 V ±10%		1.6	3.2	mA
	I_{DD3}	32.768-kHz crystal oscillation operating mode[Note 2]	V_{DD} = 5.0 V ±10%		60	120	μA
			V_{DD} = 3.0 V ±10%		32	64	μA
			V_{DD} = 2.0 V ±10%		24	48	μA
	I_{DD4}	32.768-kHz crystal oscillation HALT mode[Note 2]	V_{DD} = 5.0 V ±10%		25	55	μA
			V_{DD} = 3.0 V ±10%		5	15	μA
			V_{DD} = 2.0 V ±10%		2.5	12.5	μA
	I_{DD5}	XT1 = V_{DD} STOP mode When feedback resistor is used	V_{DD} = 5.0 V ±10%		1	30	μA
			V_{DD} = 3.0 V ±10%		0.5	10	μA
			V_{DD} = 2.0 V ±10%		0.3	10	μA
	I_{DD6}	XT1 = V_{DD} STOP mode When feedback resistor is not used	V_{DD} = 5.0 V ±10%		0.1	30	μA
			V_{DD} = 3.0 V ±10%		0.05	10	μA
			V_{DD} = 2.0 V ±10%		0.05	10	μA

Notes 1. Does not include the on-chip pull-up resistor, AV_{REF} current, and port current.

2. When the main system clock is stopped.

AC CHARACTERISTICS

(1) Basic Operation (T_A = –40 to +85°C, V_{DD} = 1.8 to 5.5 V)

Parameter	Symbol	Test Conditions		MIN.	TYP.	MAX.	Unit
Cycle time (Min. instruction execution time)	T_{CY}	Operating with main system clock	4.5 V ≤ V_{DD} ≤ 5.5 V	0.24		32	μs
			2.7 V ≤ V_{DD} < 4.5 V	0.8		32	μs
				1.6		32	μs
		Operating with subsystem clock		40 Note 1	122	125	μs
TI00, TI01 input high-/low-level width	t_{TIH0}, t_{TIL0}	3.5 V ≤ V_{DD} ≤ 5.5 V		$2/f_{sam}+0.1$ Note2			μs
		2.7 V ≤ V_{DD} < 3.5 V		$2/f_{sam}+0.2$ Note2			μs
		1.8 V ≤ V_{DD} < 2.7 V		$2/f_{sam}+0.5$ Note2			μs
TI50, TI51 input frequency	f_{TI5}	V_{DD} = 2.7 to 5.5 V		0		4	MHz
				0		275	kHz
TI50, TI51 input high-/low-level width	t_{TIH5}, t_{TIL5}	V_{DD} = 2.7 to 5.5 V		100			ns
				1.8			ns
Interrupt request input high-/low -level width	t_{INTH}, t_{INTL}	INTP0 to INTP3, P40 to P47	V_{DD} = 2.7 to 5.5 V	1			μs
				2			μs
$\overline{\text{RESET}}$ low-level width	t_{RSL}	V_{DD} = 2.7 to 5.5 V		10			μs
				20			μs

Notes 1. Value when using the external clock. When using a crystal resonator, the value becomes 114 μs (MIN.).

2. Selection of f_{sam} = f_X, $f_X/4$, $f_X/64$ is possible with bits 0 and 1 (PRM00, PRM01) of prescaler mode register 0 (PRM0). However, if the TI00 valid edge is selected as the count clock, the value becomes f_{sam} = $f_X/8$.

T_{CY} vs V_{DD} (at main system clock operation)

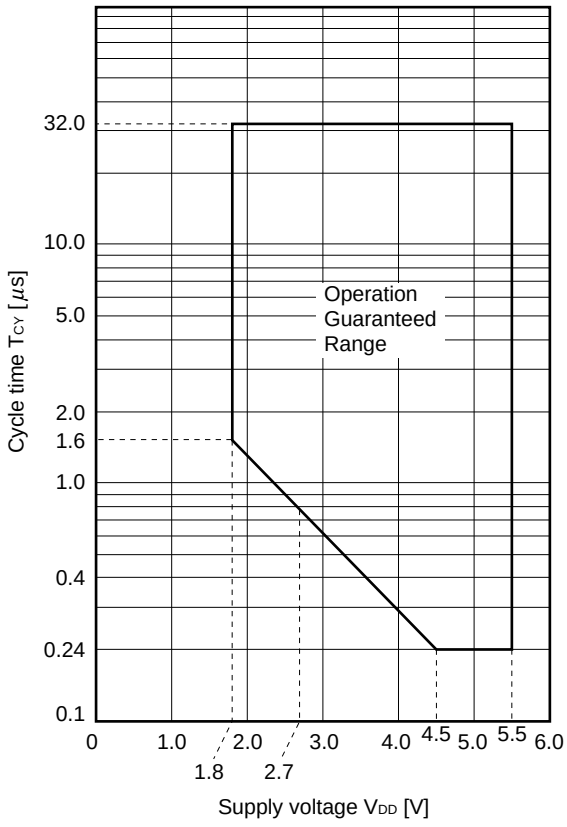

(2) Read/Write Operation (T_A = –40 to + 85°C, V_{DD} = 4.5 to 5.5 V) (1/3)

Parameter	Symbol	Test Conditions	MIN.	MAX.	Unit
ASTB high-level width	t_{ASTH}		$0.5t_{CY}$		ns
Address setup time	t_{ADS}		t_{CY}–40		ns
Address hold time	t_{ADH}		6		ns
Data input time from address	t_{ADD1}			$(2+2n)t_{CY}$–54	ns
	t_{ADD2}			$(3+2n)t_{CY}$–60	ns
Address output time from $\overline{RD}$↓	t_{RDAD}		0	100	ns
Data input time from $\overline{RD}$↓	t_{RDD1}			$(2+2n)t_{CY}$–87	ns
	t_{RDD2}			$(3+2n)t_{CY}$–93	ns
Read data hold time	t_{RDH}		0		ns
$\overline{RD}$ low-level width	t_{RDL1}		$(1.5+2n)t_{CY}$–33		ns
	t_{RDL2}		$(2.5+2n)t_{CY}$–33		ns
$\overline{WAIT}$↓ input time from $\overline{RD}$↓	t_{RDWT1}			$0.5t_{CY}$–43	ns
	t_{RDWT2}			t_{CY}–43	ns
$\overline{WAIT}$↓ input time from $\overline{WR}$↓	t_{WRWT}			$0.5t_{CY}$–25	ns
$\overline{WAIT}$ low-level width	t_{WTL}		$(0.5+2n)t_{CY}$+10	$(2+2n)t_{CY}$	ns
Write data setup time	t_{WDS}		60		ns
Write data hold time	t_{WDH}		6		ns
$\overline{WR}$ low-level width	t_{WRL1}		$(1.5+2n)t_{CY}$–15		ns
$\overline{RD}$↓ delay time from ASTB↓	t_{ASTRD}		6		ns
$\overline{WR}$↓ delay time from ASTB↓	t_{ASTWR}		$2t_{CY}$–15		ns
ASTB↑ delay time from $\overline{RD}$↑ in external fetch	t_{RDAST}		$0.8t_{CY}$–15	$1.2t_{CY}$	ns
Address hold time from $\overline{RD}$↑ in external fetch	t_{RDADH}		$0.8t_{CY}$–15	$1.2t_{CY}$+30	ns
Write data output time from $\overline{RD}$↑	t_{RDWD}		40		ns
Write data output time from $\overline{WR}$↓	t_{WRWD}		10	60	ns
Address hold time from $\overline{WR}$↑	t_{WRADH}		$0.8t_{CY}$–15	$1.2t_{CY}$+30	ns
$\overline{RD}$↑ delay time from $\overline{WAIT}$↑	t_{WTRD}		$0.8t_{CY}$	$2.5t_{CY}$+25	ns
$\overline{WR}$↑ delay time from $\overline{WAIT}$↑	t_{WTWR}		$0.8t_{CY}$	$2.5t_{CY}$+25	ns

Remarks 1. $t_{CY} = T_{CY}/4$

2. n indicates the number of waits.

(2) Read/Write Operation (T_A = –40 to + 85°C, V_{DD} = 2.7 to 4.5 V) (2/3)

Parameter	Symbol	Test Conditions	MIN.	MAX.	Unit
ASTB high-level width	t_{ASTH}		$0.5t_{CY}$		ns
Address setup time	t_{ADS}		$0.5t_{CY}$–54		ns
Address hold time	t_{ADH}		10		ns
Data input time from address	t_{ADD1}			$(2+2n)t_{CY}$–108	ns
	t_{ADD2}			$(3+2n)t_{CY}$–120	ns
Address output time from $\overline{RD}$↓	t_{RDAD}		0	200	ns
Data input time from $\overline{RD}$↓	t_{RDD1}			$(2+2n)t_{CY}$–148	ns
	t_{RDD2}			$(3+2n)t_{CY}$–162	ns
Read data hold time	t_{RDH}		0		ns
$\overline{RD}$ low-level width	t_{RDL1}		$(1.5+2n)t_{CY}$–40		ns
	t_{RDL2}		$(2.5+2n)t_{CY}$–40		ns
$\overline{WAIT}$↓ input time from $\overline{RD}$↓	t_{RDWT1}			$0.5t_{CY}$–60	ns
	t_{RDWT2}			t_{CY}–60	ns
$\overline{WAIT}$↓ input time from $\overline{WR}$↓	t_{WRWT}			$0.5t_{CY}$–50	ns
$\overline{WAIT}$ low-level width	t_{WTL}		$(0.5+2n)t_{CY}$+10	$(2+2n)t_{CY}$	ns
Write data setup time	t_{WDS}		60		ns
Write data hold time	t_{WDH}		10		ns
$\overline{WR}$ low-level width	t_{WRL1}		$(1.5+2n)t_{CY}$–30		ns
$\overline{RD}$↓ delay time from ASTB↓	t_{ASTRD}		10		ns
$\overline{WR}$↓ delay time from ASTB↓	t_{ASTWR}		$2t_{CY}$–30		ns
ASTB↑ delay time from $\overline{RD}$↑ in external fetch	t_{RDAST}		$0.8t_{CY}$–30	$1.2t_{CY}$	ns
Address hold time from $\overline{RD}$↑ in external fetch	t_{RDADH}		$0.8t_{CY}$–30	$1.2t_{CY}$+60	ns
Write data output time from $\overline{RD}$↑	t_{RDWD}		40		ns
Write data output time from $\overline{WR}$↓	t_{WRWD}		20	120	ns
Address hold time from $\overline{WR}$↑	t_{WRADH}		$0.8t_{CY}$–30	$1.2t_{CY}$+60	ns
$\overline{RD}$↑ delay time from $\overline{WAIT}$↑	t_{WTRD}		$0.5t_{CY}$	$2.5t_{CY}$+50	ns
$\overline{WR}$↑ delay time from $\overline{WAIT}$↑	t_{WTWR}		$0.5t_{CY}$	$2.5t_{CY}$+50	ns

Remarks 1. $t_{CY} = T_{CY}/4$

2. n indicates the number of waits.

(2) Read/Write Operation (T_A = –40 to + 85°C, V_{DD} = 1.8 to 2.7 V) (3/3)

Parameter	Symbol	Test Conditions	MIN.	MAX.	Unit
ASTB high-level width	t_{ASTH}		$0.5t_{CY}$		ns
Address setup time	t_{ADS}		$0.5t_{CY}$–60		ns
Address hold time	t_{ADH}		20		ns
Data input time from address	t_{ADD1}			$(2+2n)t_{CY}$–233	ns
	t_{ADD2}			$(3+2n)t_{CY}$–240	ns
Address output time from $\overline{RD}$↓	t_{RDAD}		0	400	ns
Data input time from $\overline{RD}$↓	t_{RDD1}			$(2+2n)t_{CY}$–325	ns
	t_{RDD2}			$(3+2n)t_{CY}$–332	ns
Read data hold time	t_{RDH}		0		ns
$\overline{RD}$ low-level width	t_{RDL1}		$(1.5+2n)t_{CY}$–92		ns
	t_{RDL2}		$(2.5+2n)t_{CY}$–92		ns
$\overline{WAIT}$↓ input time from $\overline{RD}$↓	t_{RDWT1}			$0.5t_{CY}$–132	ns
	t_{RDWT2}			t_{CY}–132	ns
$\overline{WAIT}$↓ input time from $\overline{WR}$↓	t_{WRWT}			$0.5t_{CY}$–100	ns
$\overline{WAIT}$ low-level width	t_{WTL}		$(0.5+2n)t_{CY}$+10	$(2+2n)t_{CY}$	ns
Write data setup time	t_{WDS}		60		ns
Write data hold time	t_{WDH}		20		ns
$\overline{WR}$ low-level width	t_{WRL1}		$(1.5+2n)t_{CY}$–60		ns
$\overline{RD}$↓ delay time from ASTB↓	t_{ASTRD}		20		ns
$\overline{WR}$↓ delay time from ASTB↓	t_{ASTWR}		$2t_{CY}$–60		ns
ASTB↑ delay time from $\overline{RD}$↑ in external fetch	t_{RDAST}		$0.8t_{CY}$–60	$1.2t_{CY}$	ns
Address hold time from $\overline{RD}$↑ in external fetch	t_{RDADH}		$0.8t_{CY}$–60	$1.2t_{CY}$+120	ns
Write data output time from $\overline{RD}$↑	t_{RDWD}		40		ns
Write data output time from $\overline{WR}$↓	t_{WRWD}		40	240	ns
Address hold time from $\overline{WR}$↑	t_{WRADH}		$0.8t_{CY}$–60	$1.2t_{CY}$+120	ns
$\overline{RD}$↑ delay time from $\overline{WAIT}$↑	t_{WTRD}		$0.5t_{CY}$	$2.5t_{CY}$+100	ns
$\overline{WR}$↑ delay time from $\overline{WAIT}$↑	t_{WTWR}		$0.5t_{CY}$	$2.5t_{CY}$+100	ns

Remarks 1. $t_{CY} = T_{CY}/4$

2. n indicates the number of waits.

(3) Serial Interface (T_A = –40 to +85°C, V_{DD} = 1.8 to 5.5 V)

(a) 3-wire serial I/O mode ($\overline{SCK30}$, $\overline{SCK31}$... Internal clock output)

Parameter	Symbol	Test Conditions	MIN.	TYP.	MAX.	Unit
$\overline{SCK30}$, $\overline{SCK31}$ cycle time	t_{KCY1}	4.5 V ≤ V_{DD} ≤ 5.5 V	954			ns
		2.7 V ≤ V_{DD} < 4.5 V	1600			ns
			3200			ns
$\overline{SCK30}$, $\overline{SCK31}$ high-/ low-level width	t_{KH1}, t_{KL1}	V_{DD} = 4.5 to 5.5 V	t_{KCY1}/2–50			ns
			t_{KCY1}/2–100			ns
SI30, SI31 setup time (to $\overline{SCK30}$, $\overline{SCK31}$↑)	t_{SIK1}	4.5 V ≤ V_{DD} ≤ 5.5V	100			ns
		2.7 V ≤ V_{DD} < 4.5V	150			ns
			300			ns
SI30, SI31 hold time (from $\overline{SCK30}$, $\overline{SCK31}$↑)	t_{KSI1}		400			ns
SO30, SO31 output dealy time from $\overline{SCK30}$, $\overline{SCK31}$↓	t_{KSO1}	C = 100 pF**Note**			300	ns

Note C is the load capacitance of the $\overline{SCK30}$, $\overline{SCK31}$, SO30, and SO31 output lines.

(b) 3-wire serial I/O mode ($\overline{SCK30}$, $\overline{SCK31}$... External clock input)

Parameter	Symbol	Test Conditions		MIN.	TYP.	MAX.	Unit
$\overline{SCK30}$, $\overline{SCK31}$ cycle time	t_{KCY2}	4.5 V ≤ V_{DD} ≤ 5.5 V		800			ns
		2.7 V ≤ V_{DD} < 4.5 V		1600			ns
				3200			ns
$\overline{SCK30}$, $\overline{SCK31}$ high-/ low-level width	t_{KH2}, t_{KL2}	4.5 V ≤ V_{DD} ≤ 5.5 V		400			ns
		2.7 V ≤ V_{DD} < 4.5 V		800			ns
				1600			ns
SI30, SI31 setup time (to $\overline{SCK30}$, $\overline{SCK31}$↑)	t_{SIK2}			100			ns
SI30, SI31 hold time (from $\overline{SCK30}$, $\overline{SCK31}$↑)	t_{KSI2}			400			ns
SO30, SO31 output dealy time from $\overline{SCK30}$, $\overline{SCK31}$↓	t_{KSO2}	C = 100 pF**Note**				300	ns
$\overline{SCK30}$, $\overline{SCK31}$ rise, fall time	t_{R2}, t_{F2}	When using external device expansion function				160	ns
		When not using external device expansion function	When using 16-bit timer expansion function			700	ns
			When not using 16-bit timer expansion function			1000	ns

Note C is the load capacitance of the SO30 and SO31 output lines.

(c) UART mode (Dedicated baud rate generator output)

Parameter	Symbol	Test Conditions	MIN.	TYP.	MAX.	Unit
Transfer rate		4.5 V ≤ V_{DD} ≤ 5.5 V			125000	bps
		2.7 V ≤ V_{DD} < 4.5 V			78125	bps
					39063	bps

(d) UART mode (External clock input)

Parameter	Symbol	Test Conditions	MIN.	TYP.	MAX.	Unit
ASCK0 cycle time	t_{KCY3}	4.5 V ≤ V_{DD} ≤ 5.5 V	800			ns
		2.7 V ≤ V_{DD} < 4.5 V	1600			ns
			3200			ns
ASCK0 high-/low-level width	t_{KH3}, t_{KL3}	4.5 V ≤ V_{DD} ≤ 5.5 V	400			ns
		2.7 V ≤ V_{DD} < 4.5 V	800			ns
			1600			ns
Transfer rate		4.5 V ≤ V_{DD} ≤ 5.5 V			39063	bps
		2.7 V ≤ V_{DD} < 4.5 V			19531	bps
					9766	bps
ASCK0 rise, fall time	t_{R3}, t_{F3}	V_{DD} = 4.5 to 5.5 V, when not using external device expansion function			1000	ns
					160	ns

(e) UART mode (Infrared ray data transfer mode)

Parameter	Symbol	Test Conditions	MIN.	MAX.	Unit
Transfer rate		V_{DD} = 4.5 to 5.5 V		115200	bps
Bit rate allowable error		V_{DD} = 4.5 to 5.5 V		±0.87	%
Output pulse width		V_{DD} = 4.5 to 5.5 V	1.2	0.24/fbr[Note]	μs
Input pulse width		V_{DD} = 4.5 to 5.5 V	4/f_X		μs

Note fbr: Specified baud rate

AC Timing Test Point (Excluding X1, XT1 Input)

Clock Timing

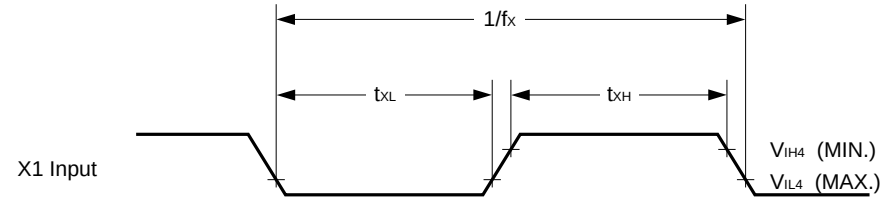

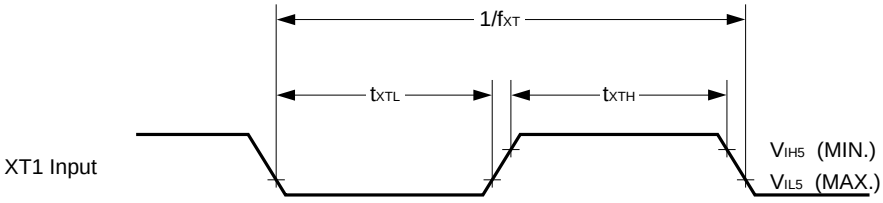

TI Timing

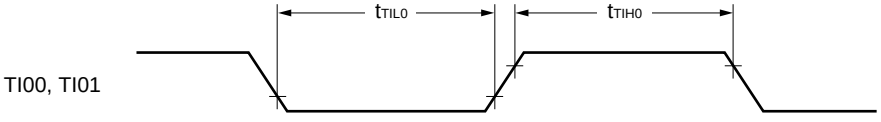

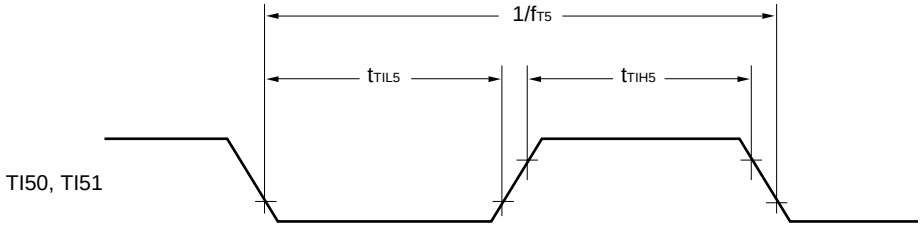

Read/Write Operation

External Fetch (No Wait) :

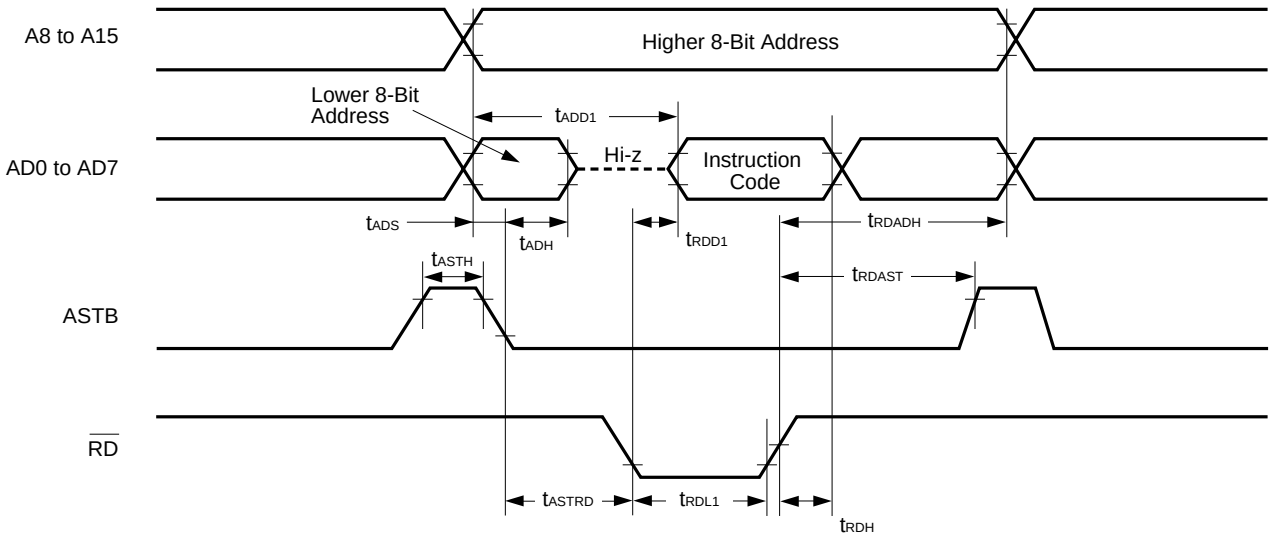

External Fetch (Wait Insertion) :

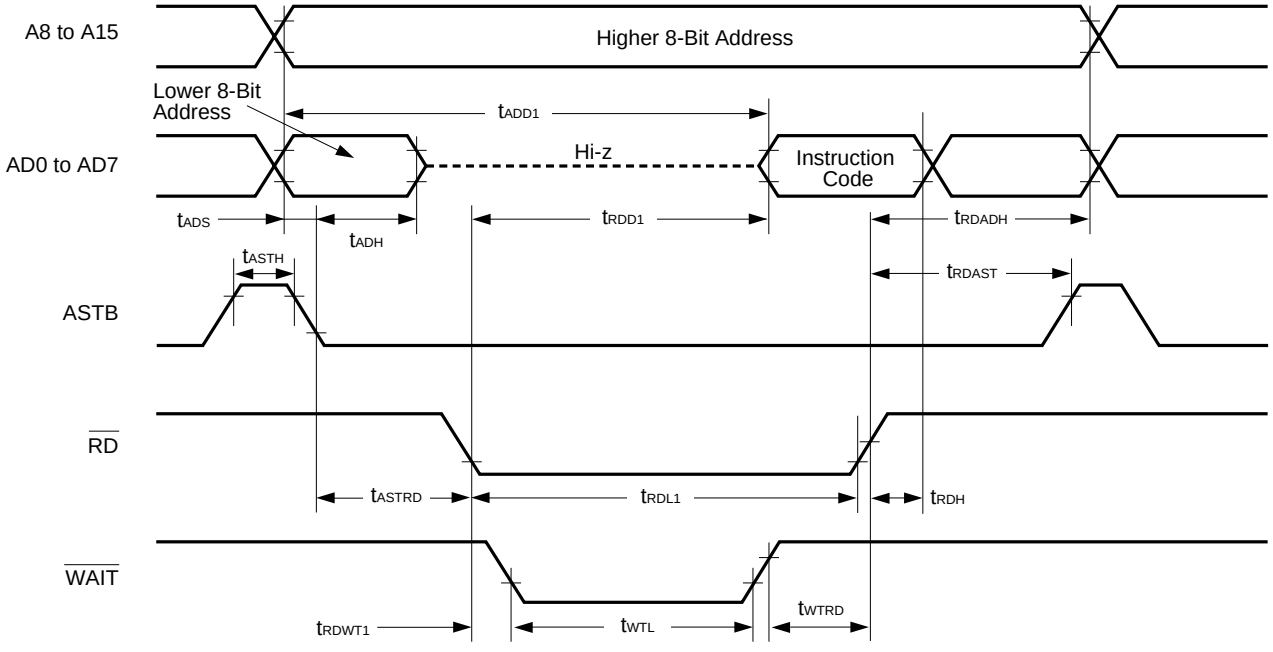

External Data Access (No Wait) :

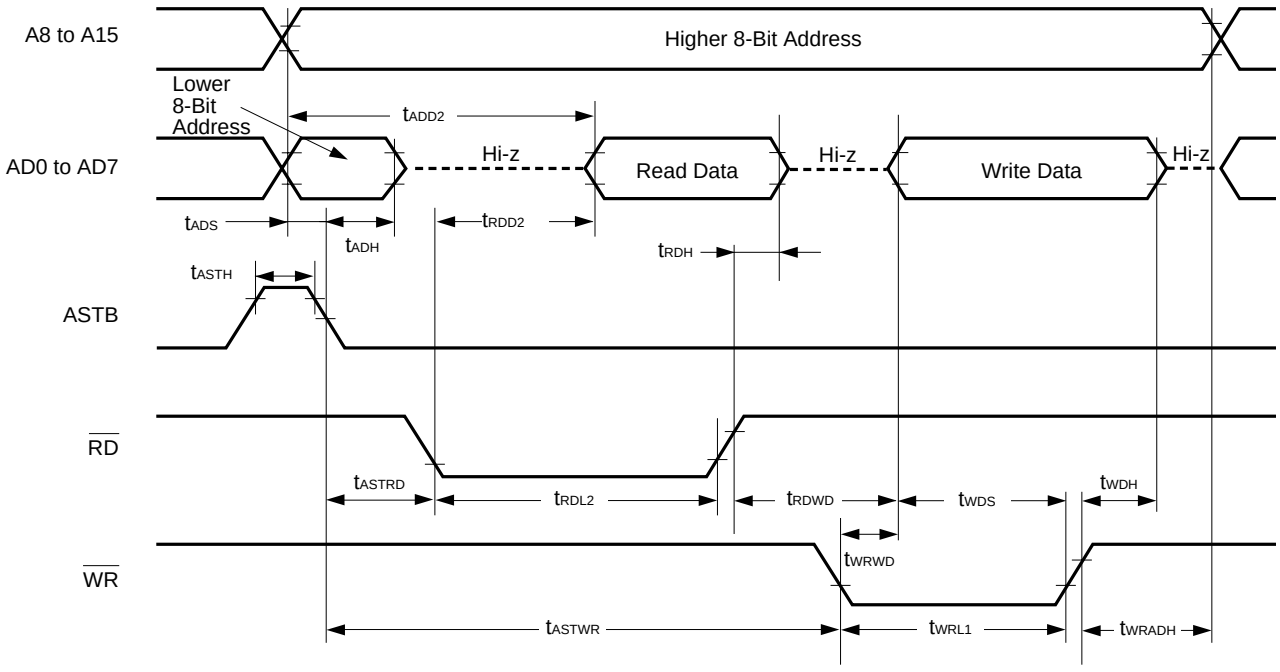

External Data Access (Wait Insertion) :

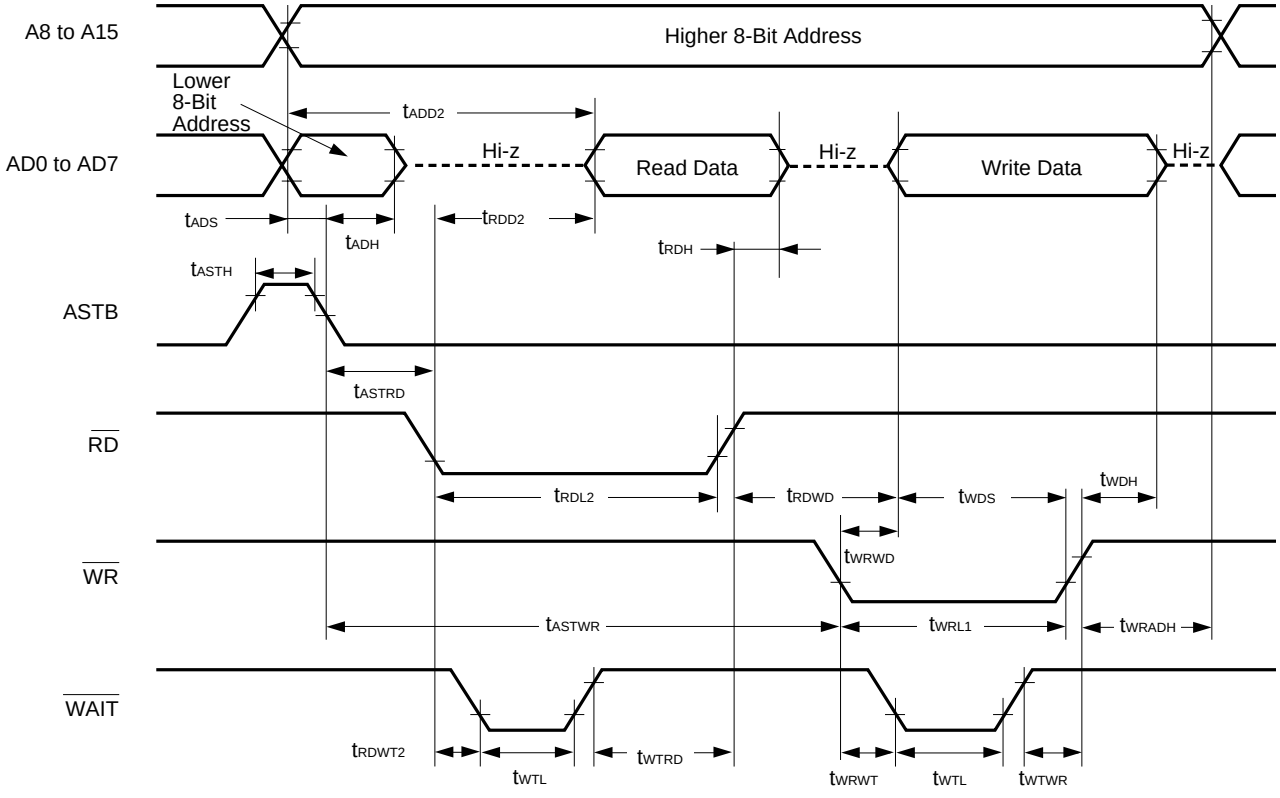

Serial Transfer Timing

3-wire Serial I/O Mode :

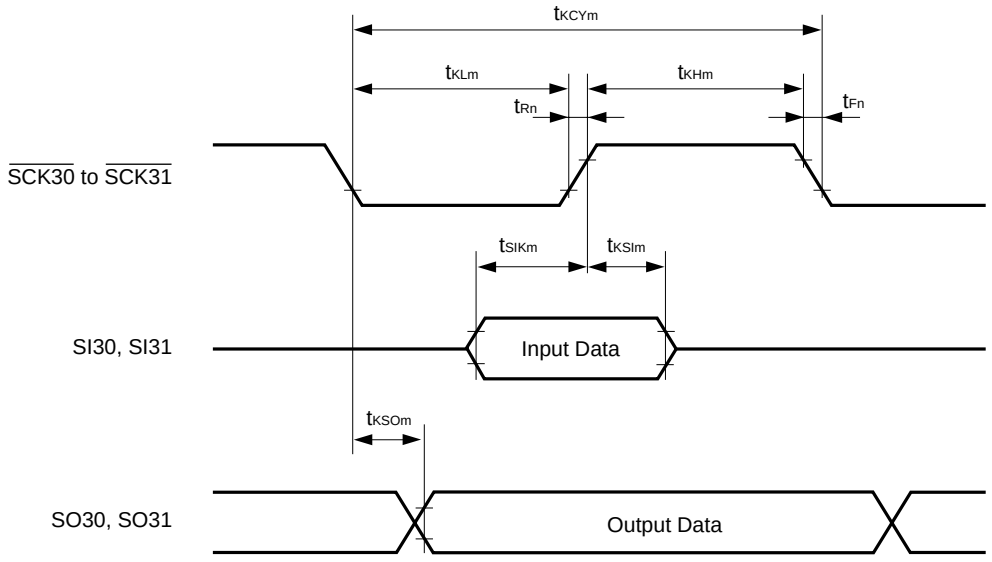

m = 1, 2
n = 2

UART Mode (External Clock Input) :

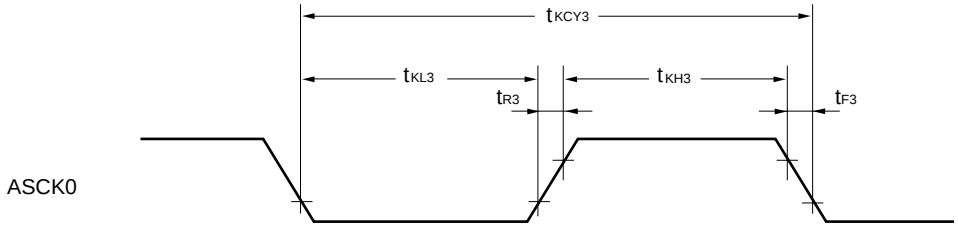

A/D Converter Characteristics (T_A = –40 to +85°C, V_{DD} = AV_{DD} = AV_{REF} = 2.7 to 5.5 V, AV_{SS} = V_{SS} = 0 V)

Parameter	Symbol	Test Conditions	MIN.	TYP.	MAX.	Unit
Resolution			10	10	10	bit
Overall error**Note**		4.5 V ≤ AV_{REF} ≤ 5.5 V			±0.4	%
		2.7 V ≤ AV_{REF} < 4.5 V			±0.7	%
Conversion time	T_{CONV}	4.5 V ≤ AV_{REF} ≤ 5.5 V	14		200 or more	μs
		2.7 V ≤ AV_{REF} < 4.5 V	20		200 or more	μs
Analog input voltage	V_{IAN}		0		AV_{REF} + 0.3	V
Reference voltage	AV_{REF}		2.7		AV_{DD}	V
AV_{REF} resistance	R_{AIREF}		10	20		kΩ

Note Overall error excluding quantization error (±1/2 LSB). It is indicated as a ratio to the full-scale value.

Data Memory STOP Mode Low Supply Voltage Data Retention Characteristics (T_A = –40 to +85°C)

Parameter	Symbol	Test Conditions	MIN.	TYP.	MAX.	Unit
Data retention power supply voltage	V_{DDDR}		1.6		5.5	V
Data retention power supply current	I_{DDDR}	V_{DDDR} = 1.6 V Subsystem clock stop and feed-back resistor disconnected		0.1	10	μA
Release signal set time	t_{SREL}		0			μs
Oscillation stabilization wait time	t_{WAIT}	Release by $\overline{RESET}$		$2^{17}/f_X$		ms
		Release by interrupt request		**Note**		ms

Note Selection of $2^{12}/f_X$ and $2^{14}/f_X$ to $2^{17}/f_X$ is possible with bits 0 to 2 (OSTS0 to OSTS2) of the oscillation stabilization time select register (OSTS).

Data Retention Timing (STOP Mode Release by $\overline{RESET}$)

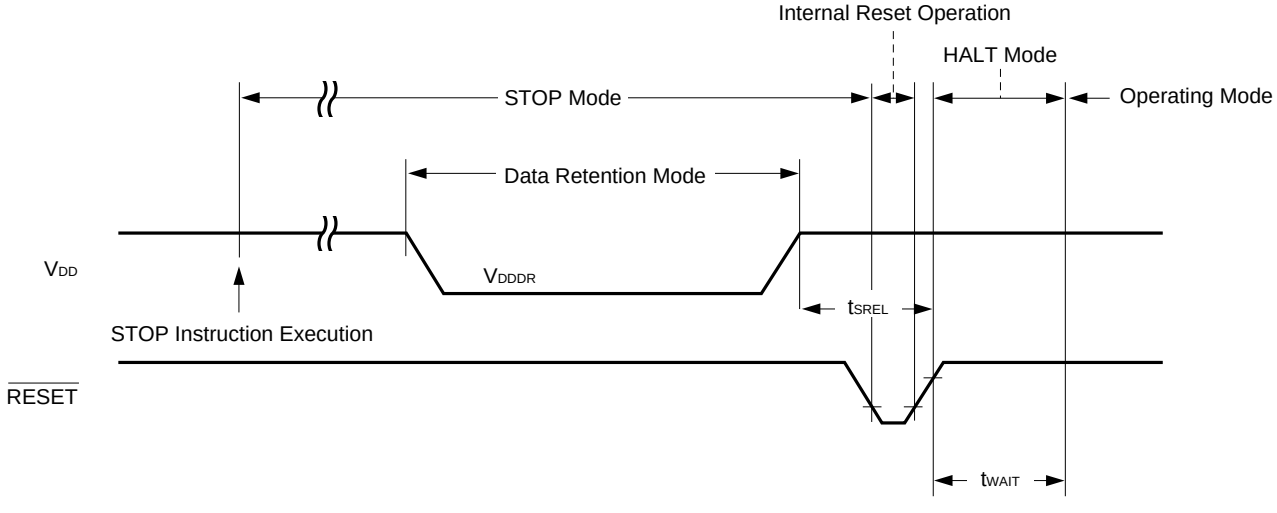

Data Retention Timing (Standby Release Signal: STOP Mode Release by Interrupt Request Signal)

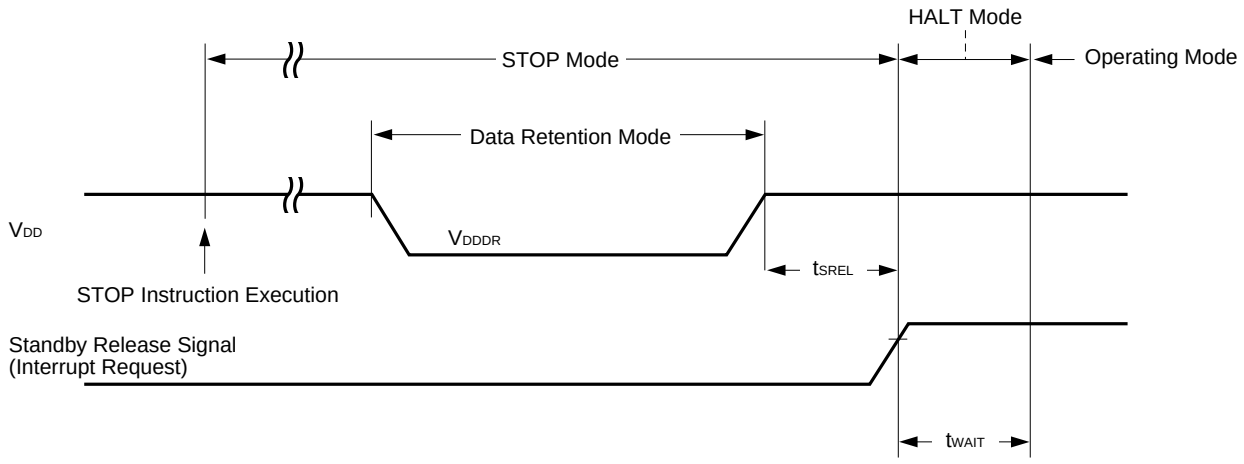

Interrupt Request Input Timing

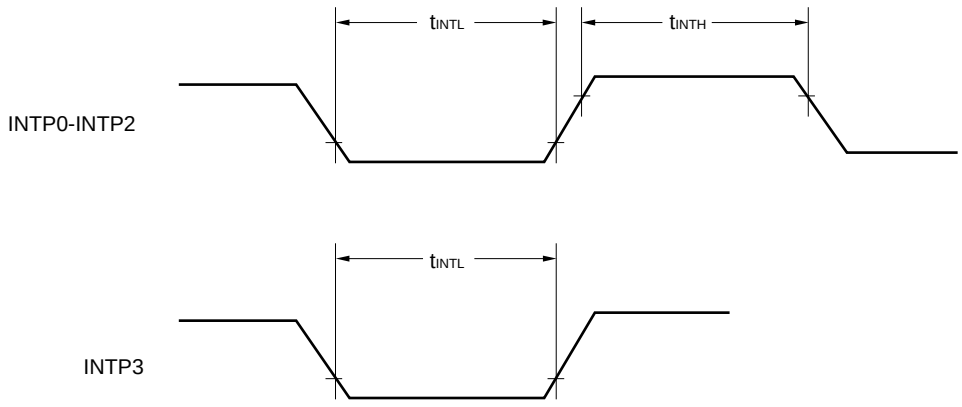

$\overline{\text{RESET}}$ Input Timing

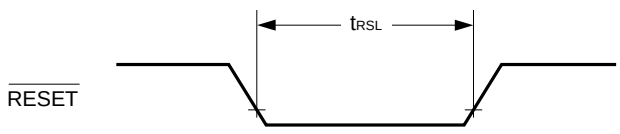

12. PACKAGE DRAWINGS

64-PIN PLASTIC SHRINK DIP (750 mils)

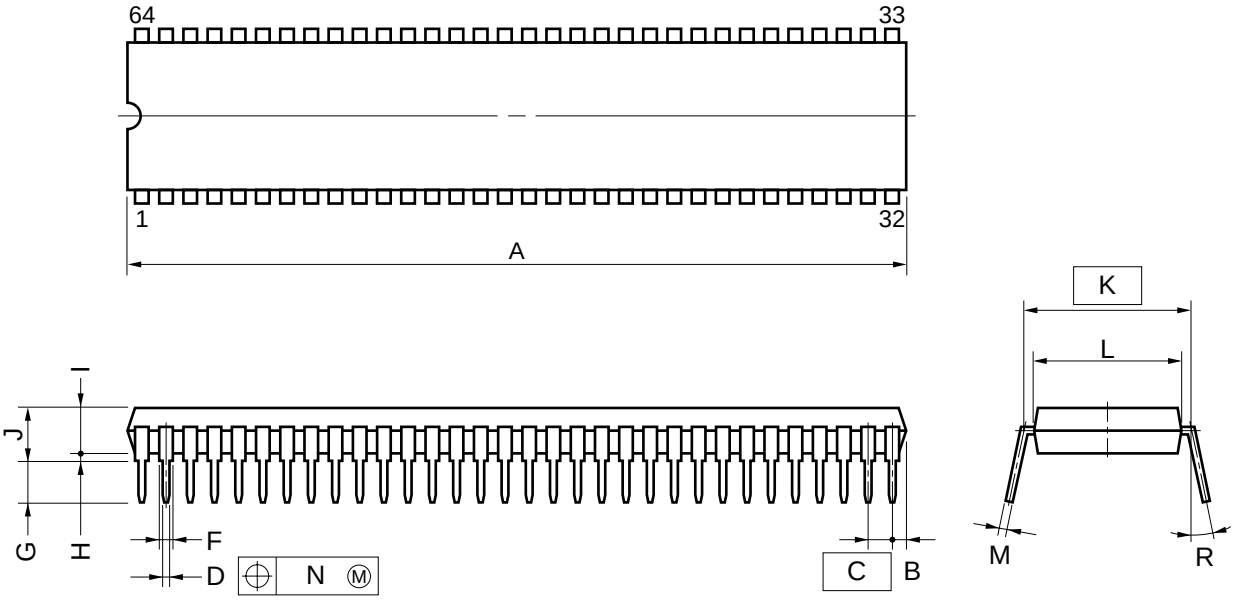

NOTE

1) Each lead centerline is located within 0.17 mm (0.007 inch) of its true position (T.P.) at maximum material condition.

2) Item "K" to center of leads when formed parallel.

ITEM	MILLIMETERS	INCHES
A	58.68 MAX.	2.311 MAX.
B	1.78 MAX.	0.070 MAX.
C	1.778 (T.P.)	0.070 (T.P.)
D	0.50±0.10	$0.020^{+0.004}_{-0.005}$
F	0.9 MIN.	0.035 MIN.
G	3.2±0.3	0.126±0.012
H	0.51 MIN.	0.020 MIN.
I	4.31 MAX.	0.170 MAX.
J	5.08 MAX.	0.200 MAX.
K	19.05 (T.P.)	0.750 (T.P.)
L	17.0	0.669
M	$0.25^{+0.10}_{-0.05}$	$0.010^{+0.004}_{-0.003}$
N	0.17	0.007
R	0~15°	0~15°

P64C-70-750A,C-1

64-PIN PLASTIC QFP (14×14)

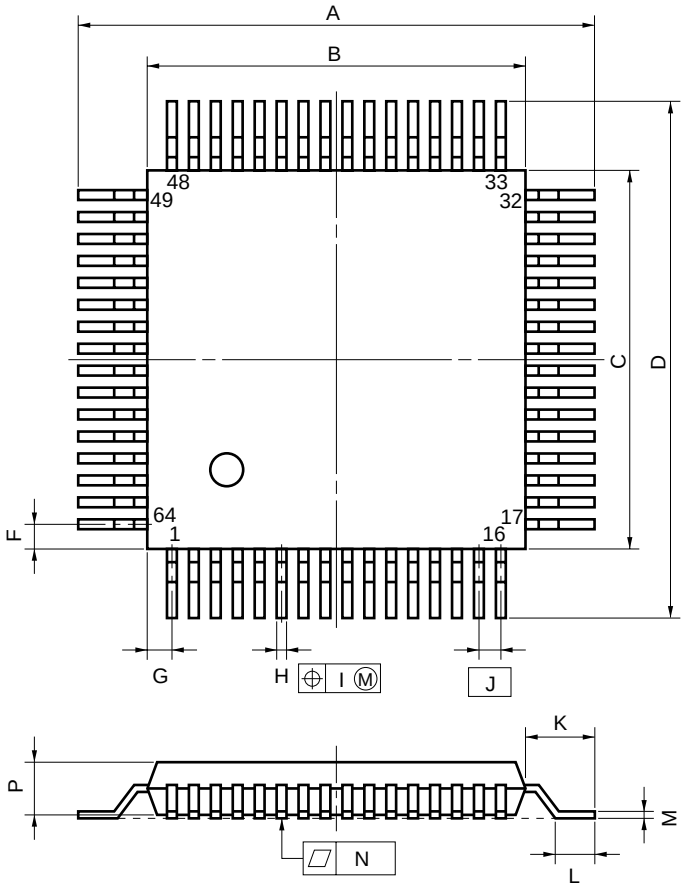

detail of lead end

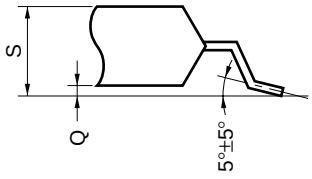

P64GC-80-AB8-3

NOTE

Each lead centerline is located within 0.15 mm (0.006 inch) of its true position (T.P.) at maximum material condition.

ITEM	MILLIMETERS	INCHES
A	17.6±0.4	0.693±0.016
B	14.0±0.2	$0.551^{+0.009}_{-0.008}$
C	14.0±0.2	$0.551^{+0.009}_{-0.008}$
D	17.6±0.4	0.693±0.016
F	1.0	0.039
G	1.0	0.039
H	0.35±0.10	$0.014^{+0.004}_{-0.005}$
I	0.15	0.006
J	0.8 (T.P.)	0.031 (T.P.)
K	1.8±0.2	0.071±0.008
L	0.8±0.2	$0.031^{+0.009}_{-0.008}$
M	$0.15^{+0.10}_{-0.05}$	$0.006^{+0.004}_{-0.003}$
N	0.10	0.004
P	2.55	0.100
Q	0.1±0.1	0.004±0.004
S	2.85 MAX.	0.112 MAX.

Phase-out/Discontinued

64-PIN PLASTIC LQFP (12×12)

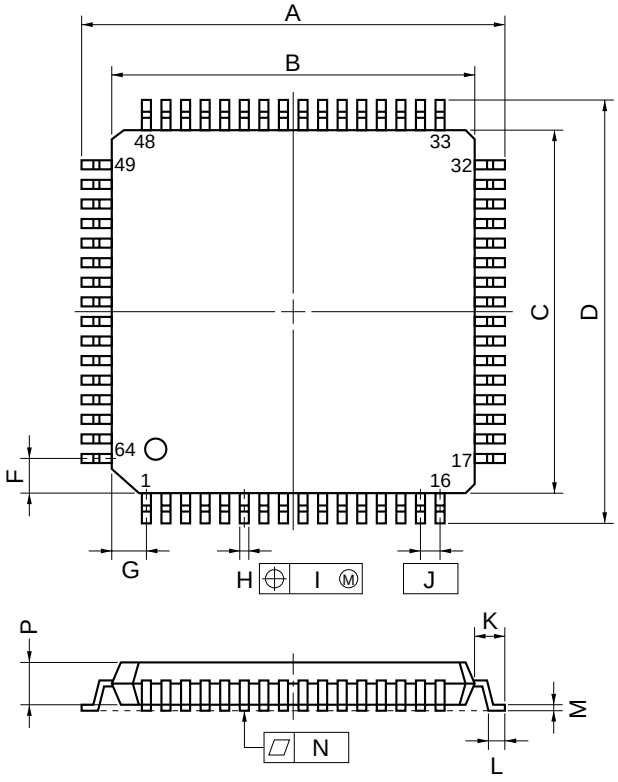

detail of lead end

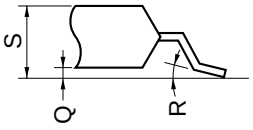

NOTE

Each lead centerline is located within 0.13 mm (0.005 inch) of its true position (T.P.) at maximum material condition.

ITEM	MILLIMETERS	INCHES
A	14.8±0.4	0.583±0.016
B	12.0±0.2	$0.472^{+0.009}_{-0.008}$
C	12.0±0.2	$0.472^{+0.009}_{-0.008}$
D	14.8±0.4	0.583±0.016
F	1.125	0.044
G	1.125	0.044
H	0.30±0.10	$0.012^{+0.004}_{-0.005}$
I	0.13	0.005
J	0.65 (T.P.)	0.026 (T.P.)
K	1.4±0.2	0.055±0.008
L	0.6±0.2	$0.024^{+0.008}_{-0.009}$
M	$0.15^{+0.10}_{-0.05}$	$0.006^{+0.004}_{-0.003}$
N	0.10	0.004
P	1.4	0.055
Q	0.125±0.075	0.005±0.003
R	5°±5°	5°±5°
S	1.7 MAX.	0.067 MAX.

P64GK-65-8A8-1

★ APPENDIX A. DEVELOPMENT TOOLS

The following development tools are available for system development using the μPD780034 Subseries. Also refer to **(5) Cautions on using development tools.**

(1) Language Processing Software

RA78K/0	Assembler package common to 78K/0 Series
CC78K/0	C compiler package common to 78K/0 Series
DF780034	Device file for μPD780034 Subseries
CC78K/0-L	C compiler library source file common to 78K/0 Series

(2) Flash Memory Writing Tools

Flashpro II (FL-PR2)	Flash programmer dedicated on-chip flash memory microcontroller.
FA-64CW FA-64GC FA-64GK[Note]	Adapter for flash memory writing

Note Under development

(3) Debugging Tool

- **When using in-circuit emulator IE-78K0-NS**

IE-78K0-NS[Note]	In-circuit emulator common to 78K/0 Series
IE-70000-MS-PS-B	Power supply unit for IE-78K0-NS
IE-70000-98-IF-C[Note]	Interface adapter when using PC-9800 series as host machine (excluding notebook PCs)
IE-70000-CD-IF[Note]	PC card and interface cable when using notebook PC of PC-9800 series as host machine
IE-70000-PC-IF-C[Note]	Interface adapter when using IBM PC/AT™ or compatible as host machine
IE-780034-NS-EM1[Note]	Emulation board to emulate μPD780034 Subseries
NP-64CW	Emulation probe for 64-pin plastic shrink DIP (CW type)
NP-64GC	Emulation probe for 64-pin plastic QFP (GC-AB8 type)
NP-64GK[Note]	Emulation probe for 64-pin plastic LQFP (GC-8A8 type)
TGK-064SBW	Conversion adapter for connecting target system board designed to mount a 64-pin plastic LQFP (GK-8A8 type) and NP-64GK.
EV-9200GC-64	Socket to be mounted on target system board manufactured for 64-pin plastic QFP (GC-AB8 type)
ID78K0-NS[Note]	Integrated debugger for IE-78K0-NS
SM78K0	System simulator common to 78K/0 Series
DF780034	Device file for μPD780034 Subseries

Note Under development

• **When using in-circuit emulator IE-78001-R-A**

IE-78001-R-A[Note]	In-circuit emulator common to 78K/0 Series
IE-70000-98-IF-B IE-70000-98-IF-C[Note]	Interface adapter when using PC-9800 series as host machine (excluding notebook PCs)
IE-70000-PC-IF-B IE-70000-PC-IF-C[Note]	Interface adapter when using IBM PC/AT or compatible as host machine
IE-78000-R-SV3	Interface adapter and cable when using EWS as host machine
IE-780034-NS-EM1[Note]	Emulation board to emulate μPD780034 Subseries
IE-78K0-R-EX1[Note]	Emulation probe conversion board to use IE-780034-NS-EM1 on IE-78001-R-A
EP-78240CW-R	Emulation probe for 64-pin plastic shrink DIP (CW type)
EP-78240GC-R	Emulation probe for 64-pin plastic QFP (GC-AB8 type)
EP-78012GK-R	Emulation probe for 64-pin plastic LQFP (GK-8A8 type)
TGK-064SBW	Conversion adapter for connecting target system board designed to mount a 64-pin plastic LQFP (GK-8A8) and NP-64GK.
EV-9200GC-64	Socket to be mounted on target system board manufactured for 64-pin plastic QFP (GC-AB8 type)
ID78K0	Integrated debugger for IE-78001-R-A
SM78K0	System simulator common to 78K/0 Series
DF780034	Device file for μPD780034 Subseries

Note Under development

(4) Real-time OS

RX78K/0	Real-time OS for 78K/0 Series
MX78K0	OS for 78K/0 Series

(5) Cautions on using development tools

- The ID-78K0-NS, ID78K0, and SM78K0 are used in combination with the DF780034.
- The CC78K/0 and RX78K/0 are used in combination with the RA78K/0 and the DF780034.
- The Flashpro II, FA-64CW, FA-64GC, FA64GK, NP-64CW, NP64GC, and NP-64GK are products made by Naitou Densei Machidaseisakusho (044-822-3813).
  Contact an NEC distributor regarding the purchase of these products.
- The TGK-064SBW is a product made by TOKYO ELETECH CORPORATION.
  Refer to: Daimaru Kogyo, Ltd.
  Tokyo Electronic Components Division (03-3820-7112)
  Osaka Electronic Components Division (06-244-6672)
- For third party development tools, see the **78K/0 Series Selection Guide (U11126E)**.
- The host machines and OSs supporting each software are as follows.

Host Machine / [OS] / Software	PC PC-9800 series [Windows™] IBM PC/AT or compatible [Japanese/English Windows]	EWS HP9000 series 700™ [HP-UX™] SPARCstation™ [SunOS™] NEWS™ (RISC) [NEWS-OS™]
RA78K/0	√ **Note**	√
CC78K/0	√ **Note**	√
ID78K0-NS	√	–
ID78K0	√	√
SM78K0	√	–
RX78K/0	√ **Note**	√
MX78K0	√ **Note**	√

Note DOS-based software

★ APPENDIX B. RELATED DOCUMENTS

Device Related Documents

Document Name	Document No. (English)	Document No. (Japanese)
μPD780024, 780024Y, 780034, 780034Y Subseries User's Manual	U12022E	U12022J
μPD780031, 780032, 780033, 780034 Data Sheet	This document	U12300J
μPD78F0034 Preliminary Product Information	U11993E	U11993J
78K/0 Series User's Manual-Instructions	U12326E	U12326J
78K/0 Series Instruction Table	—	U10903J
78K/0 Series Instruction Set	—	U10904J
μPD780034 Subseries Special Function Register Table	—	To be prepared

Development Tool Documents (User's Manual)

Document Name		Document No. (English)	Document No. (Japanese)
RA78K Series Assembler Package	Operation	EEU-1399	EEU-809
	Language	EEU-1404	EEU-815
RA78K Series Structured Assembler Preprocessor		EEU-1402	U12323J
RA78K0 Assembler Package	Operation	U11802E	U11802J
	Assembly Language	U11801E	U11801J
	Structured Assembly Language	U11789E	U11789J
CC78K Series C Compiler	Operation	EEU-1280	EEU-656
	Language	EEU-1284	EEU-655
CC78K/0 C Compiler	Operation	U11517E	U11517J
	Language	U11518E	U11518J
CC78K/0 C Compiler Application Note	Programming Know-how	EEA-1208	EEU-618
CC78K Series Library Source File		—	U12322J
IE-78K0-NS		To be prepared	To be prepared
IE-78001-R-A		To be prepared	To be prepared
IE-780034-NS-EM1		To be prepared	To be prepared
EP-78240		U10332E	EEU-986
EP-78012GK-R		EEU-1538	EEU-5012
SM78K0 System Simulator-Windows based	Reference	U10181E	U10181J
SM78K Series System Simulator	External Part User Open Interface Specifications	U10092E	U10092J
ID78K0-NS Integrated Debugger	Reference	To be prepared	Under preparation
ID78K0 Integrated Debugger, EWS based	Reference	—	U11151J
ID78K0 Integrated Debugger, PC based	Reference	U11539E	U11539J
ID78K0 Integrated Debugger, Windows based	Guide	U11649E	U11649J

Caution The above related documents are subject to change without notice. Be sure to read the latest documents before designing.

Embedded Software Documents (User's Manual)

Document Name		Document No. (English)	Document No. (Japanese)
78K/0 Series Real-time OS	Basics	U11537E	U11537J
	Installation	U11536E	U11536J
78K/0 Series OS MX78K0	Basics	U12257E	U12257J

Other Documents

Document Name	Document No. (English)	Document No. (Japanese)
IC Package Manual	C10943X	
Semiconductor Device Mounting Technology Manual	C10535E	C10535J
Quality Grades on NEC Semiconductor Devices	C11531E	C11531J
NEC Semiconductor Device Reliability/Quality Control System	C10983E	C10983J
Guide to Prevent Damage for Semiconductor Devices by Electrostatic Discharge (ESD)	C11892E	C11892J
Guide to Quality Assurance for Semiconductor Devices	MEI-1202	—
Microcomputer Product Series Guide	—	U11416J

Caution The above related documents are subject to change without notice. Be sure to read the latest documents before designing.

[MEMO]

[MEMO]

NOTES FOR CMOS DEVICES

① PRECAUTION AGAINST ESD FOR SEMICONDUCTORS

Note: Strong electric field, when exposed to a MOS device, can cause destruction of the gate oxide and ultimately degrade the device operation. Steps must be taken to stop generation of static electricity as much as possible, and quickly dissipate it once, when it has occurred. Environmental control must be adequate. When it is dry, humidifier should be used. It is recommended to avoid using insulators that easily build static electricity. Semiconductor devices must be stored and transported in an anti-static container, static shielding bag or conductive material. All test and measurement tools including work bench and floor should be grounded. The operator should be grounded using wrist strap. Semiconductor devices must not be touched with bare hands. Similar precautions need to be taken for PW boards with semiconductor devices on it.

② HANDLING OF UNUSED INPUT PINS FOR CMOS

Note: No connection for CMOS device inputs can be cause of malfunction. If no connection is provided to the input pins, it is possible that an internal input level may be generated due to noise, etc., hence causing malfunction. CMOS device behave differently than Bipolar or NMOS devices. Input levels of CMOS devices must be fixed high or low by using a pull-up or pull-down circuitry. Each unused pin should be connected to V_{DD} or GND with a resistor, if it is considered to have a possibility of being an output pin. All handling related to the unused pins must be judged device by device and related specifications governing the devices.

③ STATUS BEFORE INITIALIZATION OF MOS DEVICES

Note: Power-on does not necessarily define initial status of MOS device. Production process of MOS does not define the initial operation status of the device. Immediately after the power source is turned ON, the devices with reset function have not yet been initialized. Hence, power-on does not guarantee out-pin levels, I/O settings or contents of registers. Device is not initialized until the reset signal is received. Reset operation must be executed immediately after power-on for devices having reset function.

Regional Information

Some information contained in this document may vary from country to country. Before using any NEC product in your application, please contact the NEC office in your country to obtain a list of authorized representatives and distributors. They will verify:

- Device availability
- Ordering information
- Product release schedule
- Availability of related technical literature
- Development environment specifications (for example, specifications for third-party tools and components, host computers, power plugs, AC supply voltages, and so forth)
- Network requirements

In addition, trademarks, registered trademarks, export restrictions, and other legal issues may also vary from country to country.

NEC Electronics Inc. (U.S.)
Santa Clara, California
Tel: 408-588-6000
800-366-9782
Fax: 408-588-6130
800-729-9288

NEC Electronics (Germany) GmbH
Duesseldorf, Germany
Tel: 0211-65 03 02
Fax: 0211-65 03 490

NEC Electronics (UK) Ltd.
Milton Keynes, UK
Tel: 01908-691-133
Fax: 01908-670-290

NEC Electronics Italiana s.r.1.
Milano, Italy
Tel: 02-66 75 41
Fax: 02-66 75 42 99

NEC Electronics (Germany) GmbH
Benelux Office
Eindhoven, The Netherlands
Tel: 040-2445845
Fax: 040-2444580

NEC Electronics (France) S.A.
Velizy-Villacoublay, France
Tel: 01-30-67 58 00
Fax: 01-30-67 58 99

NEC Electronics (France) S.A.
Spain Office
Madrid, Spain
Tel: 01-504-2787
Fax: 01-504-2860

NEC Electronics (Germany) GmbH
Scandinavia Office
Taeby, Sweden
Tel: 08-63 80 820
Fax: 08-63 80 388

NEC Electronics Hong Kong Ltd.
Hong Kong
Tel: 2886-9318
Fax: 2886-9022/9044

NEC Electronics Hong Kong Ltd.
Seoul Branch
Seoul, Korea
Tel: 02-528-0303
Fax: 02-528-4411

NEC Electronics Singapore Pte. Ltd.
United Square, Singapore 1130
Tel: 253-8311
Fax: 250-3583

NEC Electronics Taiwan Ltd.
Taipei, Taiwan
Tel: 02-719-2377
Fax: 02-719-5951

NEC do Brasil S.A.
Cumbica-Guarulhos-SP, Brasil
Tel: 011-6465-6810
Fax: 011-6465-6829

J97. 8

The related documents indicated in this publication may include preliminary versions. However, preliminary versions are not marked as such.

The export of this product from Japan is regulated by the Japanese government. To export this product may be prohibited without governmental license, the need for which must be judged by the customer. The export or re-export of this product from a country other than Japan may also be prohibited without a license from that country. Please call an NEC sales representative.

M4 96.5